IMPROVEMENT CONSTRUCTION PLANS

FOR

BROWNSVILLE P.U.B. ROBINDALE WWTP VACTOR TRUCK DISPOSAL FACILITY IMPROVEMENTS

BROWNSVILLE, TEXAS

OWNER/DEVELOPER

BROWNSVILLE PUBLIC UTILITIES BOARD
1495 ROBINHOOD DR, BROWNSVILLE, TX, 78520
CONTACT: MICHAEL ANZALDUA
EMAIL: MANZALDUA@BROWNSVILLE-PUB.COM
TEL: (956) 983-6100

ENGINEER

HALFF ASSOCIATES, INC.
1075 PAREDES LINE ROAD SUITE B
BROWNSVILLE, TX. 78521
CONTACT: JOHN W. CLINT, P.E.
EMAIL: JCLINT@HALFF.COM
TEL: (956) 303-7100
TBPE FIRM# F-312

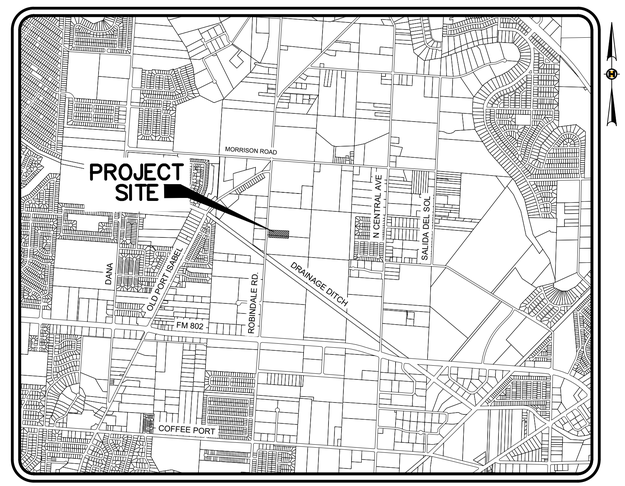

LOCATION MAP
SCALE / 1" = 2000'

SHEET INDEX

HALFF
1075 PAREDES LINE RD. SUITE B
BROWNSVILLE, TEXAS 78521
TEL (956) 303-7100

AVO: 37837 DATE: OCTOBER 2020

GENERAL CONSTRUCTION NOTES:

1. ALL MATERIALS, WORKMANSHIP AND IMPROVEMENTS SHALL BE IN ACCORDANCE WITH ALL LOCAL CODES, INCLUDING THE STANDARD CONSTRUCTION DETAILS AND TECHNICAL SPECIFICATIONS FROM THE CITY OF BROWNSVILLE (THE OWNER), TEXAS DEPARTMENT OF TRANSPORTATION AND ALL OTHER GOVERNING AGENCIES.

2. PRIOR TO BEGINNING CONSTRUCTION, THE OWNER OR HIS AUTHORIZED REPRESENTATIVE SHALL SCHEDULE A PRECONSTRUCTION CONFERENCE BETWEEN THE CONSULTING ENGINEER, CONTRACTOR, CITY OF BROWNSVILLE, BROWNSVILLE PUB AND ALL AFFECTED PARTIES.

3. PRE–CONSTRUCTION PHOTOGRAPHS SHALL BE TAKEN ACCORDING TO SPECIFICATION 01 32 33 – PHOTOGRAPHIC DOCUMENTATION THAT SHOW EXISTING CONDITIONS OF THE SITE AND ADJOINING STRUCTURES TO REMAIN. PHOTOS SHALL INCLUDE DAMAGE TO FINISH SURFACES THAT MIGHT BE MISCONSTRUED AS DAMAGE CAUSED BY DEMOLITION OPERATIONS. (NO SEPARATE PAY)

4. THE CONTRACTOR SHALL HAVE A PERSON ON CALL 24 HOURS A DAY TO ADDRESS CONSTRUCTION AREA MAINTENANCE ITEMS, TRAFFIC CONTROL, OR OTHER NEEDS NECESSARY FOR PUBLIC SAFETY. THIS PERSON SHALL HAVE AUTHORITY TO ACT ON BEHALF OF THE CONTRACTOR IN EMERGENCY CONDITIONS. THE PERSON SHALL BE STATIONED WITHIN 1/2 HOUR TRAVEL TIME FROM THE PROJECT SITE. THE PERSON SHALL BE IDENTIFIED IN WRITING PRIOR TO START OF CONSTRUCTION. THE ON–SITE REPRESENTATIVE SHALL HAVE ACCESS ALL EQUIPMENT AND MATERIAL AND HAVE FULL AUTHORITY NECESSARY TO CORRECT ANY PROBLEMS, DEFICIENCIES, OR EMERGENCIES WHICH MAY ARISE DURING NON–WORKING HOURS AND DURING THE ABSENCE OF THE SUPERINTENDENT.

5. STANDARD WORK HOURS: THE STANDARD WORK HOURS FOR THE OWNER IS 8:00 AM TO 5:00 PM, MONDAY THROUGH FRIDAY. SHOULD THE CONTRACTOR ELECT TO WORK ON SATURDAY, SUNDAYS OR HOLIDAYS, HE SHALL BE RESPONSIBLE FOR PAYING OVERTIME CHARGES FOR THE OWNERS PERSONNEL INVOLVED. THESE CHARGES WILL BE AT COST AND WILL BE CALCULATED EITHER AT TIME AND A HALF OR DOUBLE TIME, AS APPLICABLE TO THE PARTICULAR DAY BEING WORKED. PRE–APPROVAL SHALL BE OBTAINED FROM THE ENGINEER OR ENGINEER'S REPRESENTATIVE BY COMPLETING AND SIGNING A OWNER'S FORM ENTITLED "CONSTRUCTION INSPECTORS OVERTIME COMPENSATION AUTHORIZATION", PRIOR TO COMMENCING ANY OVERTIME WORK.

ANY WORK DONE OUTSIDE THE STANDARD WORKDAY, WITHOUT PRIOR AUTHORIZATION, SHALL BE CONSIDERED UNDER UNAUTHORIZED WORK. THE CONTRACTOR IS REQUIRED TO PAY THE OVERTIME WAGES OF THE OWNER INSPECTORS THAT WORK OVERTIME MONDAYS THROUGH FRIDAYS AT TIME IN A HALF. THE CONTRACTOR IS RESPONSIBLE FOR THE OVERTIME WAGES OF THE ONWER INSPECTORS THAT WORK HOLIDAYS AT DOUBLE TIME. MINIMUM HOURS WILL BE BILLED TO CONTRACTOR FOR CALL OUTS OR FOR INSUFFICIENT NOTICE OF TWO (2) HOURS.

6. THE CONTRACTOR SHALL VERIFY ALL HORIZONTAL AND VERTICAL DIMENSIONS AND THE LOCATION OF EXISTING AND PROPOSED PROJECT ELEMENTS PRIOR TO CONSTRUCTION. ANY DISCREPANCIESBETWEEN PLAN DIMENSIONS AND ACTUAL FIELD CONDITIONS SHALL IMMEDIATELY BE BROUGHT TO THE ATTENTION OF THE ENGINEER AND OWNER. NO CONSTRUCTION ACTIVITY SHALL CONTINUE WITHOUT APPROVAL FROM THE OWNER.

7. ALL MATERIALS AND LABOR, WHETHER SPECIFICALLY INDICATED ON PLANS OR NOT, WHICH ARE NECESSARY FOR THE PROPER INSTALLATION AND FUNCTION OF THE SYSTEM SHALL BE FURNISHED BY THIS CONTRACTOR.

8. CONTRACTOR SHALL NOT PROCEED WITH ANY WORK INVOLVING A CHANGE IN PROJECT SCOPE, EQUIPMENT, MATERIALS OR COST WITHOUT FIRST HAVING OBTAINED ENGINEER'S AND/OR OWNER'S APPROVAL IN WRITING. IF APPROVAL HAS NOT BEEN OBTAINED IN WRITING PRIOR TO PROCEEDING WITH ANY CHANGE, CONTRACTOR WILL NOT BE REIMBURSED FOR SUCH CHANGE.

9. CONTRACTOR TO PLAN AND PERFORM HIS WORK IN A MANNER THAT WILL PERMIT SAFE PUBLIC TRAFFIC MOVEMENT ON ALL STREETS.

10. THE CONTRACTOR SHALL PLAN AND SEQUENCE ALL CONSTRUCTION ACTIVITY IN SUCH A MANNER THAT WILL PERMIT SAFE PEDESTRIAN AND VEHICULAR MOVEMENT.

11. TEMPORARY TRAFFIC CONTROL DURING CONSTRUCTION SHALL BE IN ACCORDANCE WITH TXDOT SPECIFICATIONS. CONTRACTOR SHALL SUBMIT A TRAFFIC CONTROL PLAN, IN ACCORDANCE WITH SPECIFICATION 01 55 26 TRAFFIC CONTROL AND REGULATION FOR APPROVAL BY THE OWNER, PRIOR TO CONSTRUCTION. THE TRAFFIC CONTROL PLAN SHALL BE PREPARED BY A PROFESSIONAL ENGINEER LICENSED TO PRACTICE IN THE STATE OF TEXAS. ALL TRAFFIC CONTROL / TRAFFIC SAFETY SHALL BE IN ACCORDANCE WITH THE LATEST MANUAL OF UNIFORM TRAFFIC CONTROL DEVICES (MUTCD) CRITERIA.

12. CONTRACTOR SHALL PROVIDE PROTECTIVE DEVICES SUCH AS SIGNS, LIGHTS, SIGNALS, AND OTHER DEVICES, AS NEEDED FOR THE SAFETY OF THE PUBLIC AND WORKERS. (NO SEPARATE PAY)

13. CONTRACTOR SHALL BE RESPONSIBLE FOR PROTECTION AND SAFETY OF THE WORK SITE, WORKERS, SUBCONTRACTORS, MATERIALS AND EQUIPMENT.

14. THE DRAWINGS AND SPECIFICATIONS REPRESENT THE COMPLETED STRUCTURES/DESIGN. THEY DO NOT INDICATE THE METHOD OF CONSTRUCTION. THE CONTRACTOR SHALL PROVIDE ALL MEASURES AND MEANS NECESSARY TO PROTECT PERSONS AND STRUCTURES DURING CONSTRUCTION. OBSERVATION BY THE ENGINEER OR THE OWNER DOES NOT INCLUDE REVIEW OF THESE MEASURES.

15. THESE PLANS, PREPARED BY HALFF ASSOCIATES, INC., DO NOT EXTEND TO OR INCLUDE DESIGN OF SYSTEMS PERTAINING TO THE SAFETY OF THE CONSTRUCTION CONTRACTOR OR ITS EMPLOYEES, AGENTS OR REPRESENTATIVES IN THE PERFORMANCE OF THE WORK. THE SEAL OF HALFF ASSOCIATES, INC., REGISTERED PROFESSIONAL ENGINEER(S) HEREON DOES NOT EXTEND TO ANY SUCH SAFETY SYSTEMS THAT MAY NOW OR HEREAFTER BE INCORPORATED IN THESE PLANS. THE CONSTRUCTION CONTRACTOR SHALL PREPARE OR OBTAIN THE APPROPRIATE SAFETY SYSTEMS, INCLUDING THE PLANS AND SPECIFICATIONS REQUIRED BY THE HOUSE BILLS 662 AND 665 ENACTED BY THE TEXAS LEGISLATURE IN THE 70TH LEGISLATURE REGULAR SESSION.

16. ALL CONSTRUCTION OPERATIONS TO BE ACCOMPLISHED IN ACCORDANCE WITH APPLICABLE REGULATIONS OF THE U.S. OCCUPATIONAL SAFETY AND HEALTH ADMINISTRATION. COPIES OF OSHA STANDARDS MAY BE PURCHASED FROM THE U.S. GOVERNMENT PRINTING OFFICE.

17. ELECTRICAL LINES ARE LOCATED IN THE PROJECT AREA. THE ATTENTION OF THE CONTRACTOR IS DIRECTED TO STATE LAW (VERNON'S ANNOTATED TEXAS STATUTES, ARTICLE 1436 (C)) CONCERNING CONSTRUCTION OPERATIONS IN THE VICINITY OF ELECTRICAL LINES AND THE NEED FOR EFFECTIVE PRECAUTIONARY MEASURES.

18. ANY CHANGES OR REVISIONS TO THE UTILITY DESIGN MUST FIRST BE SUBMITTED TO THE BROWNSVILLE PUBLIC UTILITY BOARD FOR REVIEW AND WRITTEN APPROVAL.

19. THE CONTRACTOR SHALL GIVE THE BROWNSVILLE PUBLIC UTILITY BOARD 24 HOUR ADVANCE NOTICE PRIOR TO PLACEMENT OF ANY CONCRETE, TO PERMIT THE REVIEW OF FORMS. REINFORCING STEEL PLACEMENT, AND OTHER PREPARATIONS.

20. ALL CONSTRUCTION SHALL BE IN ACCORDANCE WITH THE LATEST CITY OF BROWNSVILLE PUBLIC UTILITY BOARD STANDARD SPECIFICATIONS.

21. UNLESS OTHERWISE SPECIFIED BY THE ENGINEER, ALL UTILITY CONCRETE IS TO BE CLASS "K" (4000 PS|~28 DAYS), AND ALL REINFORCING STEEL TO BE ASTM A615 GRADE 60.

22. MAXIMUM LENGTH OF OPEN TRENCH TO BE 60', OR AS DIRECTED BY THE OWNER.

23. CONTRACTOR SHALL PROVIDE A SEQUENCE OF WORK AND PERFORM ASSOCIATED GRADING THAT PROVIDES POSITIVE OUTFALLS AT ALL TIMES.

24. CONSTRUCTION STAKING AND SURVEYING SHALL BE PROVIDED BY THE CONTRACTOR AND AT CONTRACTOR'S EXPENSE. ALL DIMENSIONS ARE TO BACK OF CURB OR, WHERE NO CURB EXISTS, TO EDGE OF PAVEMENT UNLESS SHOWN OTHERWISE. ALL UTILITY DIMENSIONS AND STATIONS/COORDINATES ARE TO CENTER OF THE STRUCTURE UNLESS SHOWN OTHERWISE.

25. CONTRACTOR TO COORDINATE WITH THE OWNER ON WORK SCHEDULES, TESTING, GENERAL INSPECTION, AND OPERATION AND LOCATION OF EXISTING LINES.

26. THE CONTRACTOR IS RESPONSIBLE FOR SCHEDULING ALL CONSTRUCTION MATERIALS TESTING AND GENERAL INSPECTIONS. THE CONTRACTOR SHALL COORDINATE THROUGH THE OWNER'S DESIGNATED FIELD REPRESENTATIVE A MINIMUM OF 24–HOURS PRIOR TO TESTING OR INSPECTION. FAILURE TO BE PREPARED FOR TESTING MAY RESULT IN TRAVEL CHARGES. RE–TESTING WILL BE BORNE BY THE CONTRACTOR.

27. MATERIAL TESTING SHALL BE PROVIDED BY THE OWNER. RE–TEST TO BE AT CONTRACTOR'S EXPENSE.

28. THE CONTRACTOR SHALL INSPECT ALL MATERIALS AT DELIVERY AND NOTIFY THE OWNER OF ANY DAMAGED OR QUESTIONABLE MATERIALS. ANY DAMAGED OR QUESTIONABLE MATERIAL INSTALLED WITHOUT PRIOR INSPECTION BY THE OWNER SHALL BE REMOVED AT THE CONTRACTOR'S EXPENSE.

29. CONTRACTOR SHALL BE RESPONSIBLE FOR OBTAINING ALL PERMITS REQUIRED. (NO SEPARATE PAY)

30. THE CONTRACTOR IS ENCOURAGED TO INSPECT AND DOCUMENT THE PRE–CONSTRUCTION CONDITION OF ALL ITEMS TO BE AFFECTED BY PROPOSED CONSTRUCTION PRIOR TO COMMENCING.

31. ANY DAMAGE TO EXISTING PAVEMENT OR EXISTING STRUCTURES SHALL BE REPAIRED TO PRECONSTRUCTION CONDITION OR BETTER AT CONTRACTOR'S EXPENSE. EXISTING STRUCTURES MAY INCLUDE BUT ARE NOT LIMITED TO INLETS, MANHOLES, POWER POLES, SIDEWALKS, CURB AND GUTTER, FENCES, SPRINKLER SYSTEMS, LAWNS OR PRIVATE PROPERTY IMPROVEMENTS.

32. CONTRACTOR SHALL GIVE NOTICE TO ALL AUTHORIZED INSPECTORS, SUPERINTENDENTS, OR PERSONS IN CHARGE OF PRIVATE AND PUBLIC UTILITIES AFFECTED BY HIS OPERATIONS PRIOR TO COMMENCEMENT OF WORK. NOTIFY TEXAS ONE CALL FOR UTILITY LOCATIONS PRIOR TO ANY AND ALL EXCAVATIONS.

33. CONTRACTOR TO EXERCISE EXTREME CAUTION WHEN WORKING NEAR EXISTING FACILITIES AND/OR UTILITIES. ALL DAMAGE TO BE REPAIRED AT CONTRACTOR'S EXPENSE. ALL COSTS FOR INTERRUPTION OF GAS, ELECTRICAL, COMMUNICATIONS AND/OR WATER SERVICE DUE TO CONTRACTOR'S WORK SHALL BE BORNE BY THE CONTRACTOR.

34. INFORMATION ON EXISTING UTILITIES, AS SHOWN ON THESE PLANS, IS FROM BEST AVAILABLE INFORMATION OF RECORD AND SPOT FIELD LOCATIONS. ALTHOUGH EVERY EFFORT HAS BEEN MADE TO ACCURATELY DEPICT ALL UTILITIES, NOT ALL (PUBLIC AND PRIVATE) MAY BE SHOWN. CONTRACTOR IS RESPONSIBLE FOR FIELD VERIFICATION AND LOCATION OF THESE UNDERGROUND UTILITIES AS REQUIRED AT NO SEPARATE PAY. CONTRACTOR TO COORDINATE WITH ALL UTILITY COMPANIES.

35. ALL WORK SHALL BE PERFORMED WITHIN THE OWNER'S RIGHT–OF–WAY, EASEMENTS OR ON PUBLIC–OWNED PROPERTY. IT SHALL BE THE CONTRACTOR'S RESPONSIBILITY TO OBTAIN PERMISSION TO USE PRIVATE PROPERTY, IF NECESSARY, FOR THE PURPOSES OF STAGING, STOCKPILE, STORAGE OR REFUSE AREAS. THE CONTRACTOR SHALL PROVIDE WRITTEN EVIDENCE TO THE OWNER PRIOR TO USE.

36. THE CONTRACTOR SHALL DO ALL NECESSARY CLEARING, EXCAVATION, TRENCHING, SHORING, DE–WATERING, DEMOLITION, GRADING, BACKFILLING, ETC. TO COMPLETE THE PROJECT. ASSOCIATED COSTS SHALL BE SUBSIDIARY TO THE RESPECTIVE BID ITEMS AS IDENTIFIED IN THE CONTRACT UNLESS NOTED OTHERWISE.

37. THE CONTRACTOR SHALL PROVIDE AN EMERGENCY PLAN, IN CASE OF A LARGE RAIN EVENT OR OTHER IMPACTFUL EVENT, FOR APPROVAL BY THE OWNER PRIOR TO CONSTRUCTION. THE PLAN SHALL BE DEVELOPED, SIGNED AND SEALED BY A LICENSED PROFESSIONAL ENGINEER IN THE STATE OF TEXAS. ADEQUACY AND IMPLEMENTATION OF THE PLAN IS THE SOLE RESPONSIBILITY OF THE CONTRACTOR. THE OWNER RESERVES THE RIGHT TO REJECT THE PLANS. (NO SEPARATE PAY)

38. ALL COMPACTION SHALL BE ACHIEVED BY MECHANICAL METHODS. NO WATER JETTING ALLOWED, UNLESS APPROVED BY THE OWNER.

39. ALL SPOIL MATERIAL AND DEBRIS SHALL BE DISPOSED OFFSITE BY THE CONTRACTOR IN A LEGAL MANNER. FURNISHING AND TRANSPORTATION OF ALL OFFSITE MATERIAL TO BE AT CONTRACTOR'S EXPENSE.

40. DEMOLITION, REMOVAL AND DISPOSAL OF ALL EXCESS CONCRETE, CURBS, RUBBLE, ETC. TO BE DONE IN A LEGAL MANNER AT CONTRACTOR'S EXPENSE.

41. THE CONTRACTOR SHALL KEEP THE CONSTRUCTION AREA AS CLEAN AS POSSIBLE. ALL ASSOCIATED DEBRIS SHALL BE COLLECTED AND PROPERLY DISPOSED OF AT THE END OF EACH WORKDAY.

42. UPON COMPLETION OF CONSTRUCTION, CONTRACTOR SHALL RETURN THE SITE TO ORIGINAL CONTOURS UNLESS DIFFERENT FINISHED ELEVATIONS ARE SHOWN ON PLANS. CONTRACTOR TO ENSURE NO AREAS OF PONDING ARE PRESENT.

43. CONCRETE NOTES:
   A. ALL CONCRETE WORK TO BE FORMED, UNLESS OTHERWISE APPROVED.
   B. ALL CONCRETE TO BE 4000–PSI MINIMUM AT 28 DAYS, UNLESS OTHERWISE SHOWN. STRENGTH TO BE DETERMINED BY CYLINDER BREAK TEST.
   C. ALL REINFORCING STEEL TO BE ASTM A–615, GRADE 60, UNLESS OTHERWISE SHOWN.
   D. ALL EXPOSED CONCRETE WORK TO BE CHAMFERED.
   E. ALL CONCRETE USED FOR CURB AND GUTTER, CONCRETE PAVEMENT, DRIVEWAYS, SIDEWALKS AND OTHER FLAT WORK SHALL CONTAIN A MINIMUM OF 1.5 POUNDS OF FIBER MESH PER CUBIC YARD.
   F. ALL EXPOSED CONCRETE SURFACES SHALL BE TREATED WITH CURING COMPOUND RESIN BASE ASTM C 309 TYPE 2 WITH PIGMENTED TINT OF FUGITIVE DYE.

   G. EXPANSION JOINTS WILL BE PLACED AT CURB RETURNS, INLETS AND AT THE END OF EACH POUR WITH INTERVALS NOT TO EXCEED 40 FT. JOINTS SHALL CONSIST OF 1/2" PRE–MOLDED EXPANSION JOINT MATERIAL WITH 3, 36" X #5 DOWELS, ONE END GREASED AND WRAPPED. CARE MUST BE TAKEN THAT DOWELS ARE STRAIGHT AND LAID PARALLEL WITH CURB AND NO CONCRETE PLUGS OR OTHER MATERIAL BE ALLOWED THROUGH THE DOWEL HOLES OR EXPANSION MATERIAL WHICH WOULD PREVENT THE JOINT FROM OPERATION AS AN EXPANSION JOINT. EXPANSION JOINT MATERIALS SHALL BE PRE–MOLDED ASPHALT IMPREGNATED EXPANSION JOINT MATERIAL CONFORMING WITH ASTM D 994 (NOT WOOD FIBER TYPE)

   H. CONSTRUCTION (DUMMY, SAWED OR GROVED) JOINTS SHALL BE 2" DEEP AND PLACED AT MAXIMUM OF 10–FOOT INTERVALS, UNLESS OTHERWISE SPECIFIED OR DETAILED

   I. WHEN CONNECTING TO EXISTING CURB AND GUTTER, THE CONTRACTOR SHALL DRILL AND DOWEL TWO #6 X 16" TIE BARS A MINIMUM OF 6–INCHES DEEP INTO THE EXISTING CURB AND GUTTER SECTION.

44. THE CONTRACTOR SHALL BE RESPONSIBLE FOR RECORDING ALL FIELD CHANGES AND FURNISHING A LEGIBLE SET OF "AS–BUILT" DRAWINGS TO THE OWNER.

45. WHEN INSTALLING ANY MANUFACTURED PRODUCT, THE CONTRACTOR SHALL FOLLOW ALL MANUFACTURER'S RECOMMENDED INSTALLATION DIRECTIONS. IF ANY CONFLICTS OR DISCREPANCIES BETWEEN MANUFACTURER'S DIRECTIONS AND THE CONTRACT DOCUMENTS ARE FOUND, THE CONTRACTOR SHALL NOTIFY THE ENGINEER IN WRITING AND SHALL NOT PERFORM ANY WORK ON ANY ITEM UNTIL SUCH CONFLICT HAS BEEN RESOLVED IN WRITING.

PAVING CONSTRUCTION NOTES:

1. SUBGRADE EXCAVATION AND COMPACTION SHALL BE INCLUDED IN PRICE BID PER SQUARE YARD FOR "PAVEMENT BID ITEMS."

2. PAVEMENT PREPARATION RECOMMENDATIONS – PAVEMENT AREAS SHOULD BE STRIPPED OF ALL VEGETATION AND ORGANIC TOPSOIL UP TO A MINIMUM OF TWO (2) FEET BEYOND THE PAVEMENT PERIMETERS. AFTER STRIPPING, REMOVE AT LEAST SIX (6) INCHES OF ON–SITE SOIL AS MEASURED FROM EXISTING GRADE WHEN EXCAVATION OF EXISTING SUBGRADE IS NOT RECOMMENDED IN OTHER SECTIONS OF THIS REPORT. THE EXCAVATED MATERIAL, IF FREE OF ORGANIC AND/OR DELETERIOUS MATERIAL, MAY BE STOCKPILED FOR USE IN THE NON–PAVEMENT AREAS OF THE SITE.WHERE EXCAVATION OF THE SUBGRADE IS RECOMMENDED IN THIS REPORT, THE BOTTOM OF THE EXCAVATION WILL EXTEND AT LEAST TWO (2) FEET BEYOND THE LIMITS OF THE PLANNED PAVEMENT PERIMETER INCLUDING CANOPIES AND SIDEWALKS.EXPOSED SUBGRADES SHOULD BE THOROUGHLY PROOF ROLLED IN ORDER TO LOCATE AND COMPACT ANY WEAK, COMPRESSIBLE AND SOFT SPOTS. PROOF ROLLING SHALL BE IN ACCORDANCE WITH TXDOT 2014 SPECIFICATION ITEM 216. PROOF ROLLING OPERATIONS SHOULD BE OBSERVED BY THE GEOTECHNICAL ENGINEER OR HIS REPRESENTATIVE TO DOCUMENT SUBGRADE CONDITION AND PREPARATION. WEAK OR SOFT AREAS IDENTIFIED DURING PROOF ROLLING OR AREAS WHERE LARGE TREE ROOTS HAVE BEEN REMOVED WITHIN THE LIMITS OF EXCAVATION SHOULD BE REMOVED AND REPLACED WITH A SUITABLE, COMPACTED FILL IN ACCORDANCE WITH THE RECOMMENDATIONS PRESENTED IN TXDOT 2014 SPECIFICATION ITEM 132 FOR DENSITY CONTROL AND MATERIAL REQUIREMENTS FOR TYPES A AND B. IF THE FILL IS A CLAY IT SHALL MEET USCS CLASSIFICATION CL. PROOF ROLLING OPERATIONS AND ANY EXCAVATION/BACKFILL ACTIVITIES SHOULD BE OBSERVED BY GEOTECH REPRESENTATIVES TO DOCUMENT SUBGRADE PREPARATION. THE EXPOSED SUBGRADE SHALL THEN BE PREPARED BASED ON WHAT OPTION IS SELECTED FROM THE PAVEMENT RECOMMENDATIONS. THE SOIL SHOULD BE WORKED IN ACCORDANCE WITH THE RECOMMENDATIONS AND TESTED BY GEOTECH PERSONNEL FOR COMPACTION AS SPECIFIED

3. ALL PAVEMENTS SHALL BE NEATLY SAW–CUT PARALLEL OR PERPENDICULAR TO THE PAVEMENT EDGE (NO ANGLED SAW CUTS). DAMAGE TO PAVEMENT BEYOND THE EXTENTS OF CONSTRUCTION LIMITS AS A RESULT OF FAILURE TO PROPERLY SAW–CUT SHALL BE REPAIRED AT THE CONTRACTOR'S EXPENSE.

4. CONSTRUCTION JOINTS TO EXISTING PAVEMENT SHALL BE MADE BY EITHER CUTTING BACK EXISTING TO PRODUCE A SLIGHTLY BEVELED EDGE FOR THE FULL THICKNESS OF THE WEARING COURSE OR A SUITABLE LAP JOINT SHALL BE MADE. SAW CUTTING REQUIRED.

5. ANY SETTLEMENT UNDER PAVEMENT DUE TO INADEQUATE COMPACTION OF UTILITY LINE BACKFILL SHALL BE CAUSE FOR RECOMPACTION OF TRENCH AND REPLACEMENT OF PAVEMENT SECTION AT CONTRACTOR'S EXPENSE.

6. CONSTRUCTION JOINTS SHALL BE AT LEAST $\frac{1}{4}$" THE THICKNESS OF CONCRETE AND AT INTERVALS SPECIFIED IN THE SHEET AND/OR DETAIL.

UTILITY GENERAL NOTES:

1. THE TYPE, SIZE AND LOCATION OF ALL UNDERGROUND UTILITIES DEPICTED ON THE CONSTRUCTION PLANS WERE RESEARCHED WITH RESPECT TO THE BEST AVAILABLE DATA AND THEREFORE SHOWN APPROXIMATE. ALTHOUGH EVERY EFFORT HAS BEEN MADE TO ACCURATELY DEPICT ALL UTILITIES, NOT ALL (PUBLIC AND PRIVATE) MAY BE SHOWN. NEITHER THE ENGINEER NOR THE OWNER IS RESPONSIBLE FOR THE ACCURACY OF THE LOCATION OF THE UTILITIES SHOWN ON THE CONSTRUCTION PLANS. IT SHALL BE THE RESPONSIBILITY OF THE CONTRACTOR TO CONTACT ALL UTILITY COMPANIES WITH JURISDICTION WITHIN THE LIMITS OF CONSTRUCTION FOR FIELD VERIFICATION AT NO ADDITIONAL EXPENSE TO THE OWNER. UTILITY COMPANIES TO INCLUDE BUT NOT LIMITED TO THE FOLLOWING:

BROWNSVILLE PUB (956) 983–6100
BROWNSVILLE ENGINEERING DEPT. (956) 541–1012
TXDOT – BROWNSVILLE OFFICE (956) 542–2260
TEXAS 811
TEXAS GAS SERVICE(800) 959–5325
SPECTRUM/TIME WARNER CABLE (800) 222–5355
AT&T TEXAS(956) 630–8261
AMERICAN ELECTRIC AND POWER (AEP) TEXAS (800) 277–2177 MAGIC
VALLEY ELECTRICAL COOPERATIVE (MVEC) (866) 225–5683 FRONTIER
COMMUNICATIONS (800) 921–8101
CHARTER COMMUNICATIONS (866) 874–2389
VERIZON (800) 922–0204

2. CONTRACTOR SHALL EXPOSE ANY EXISTING UTILITY THAT MAY BE IN CONFLICT PRIOR TO COMMENCING CONSTRUCTION AND EXCAVATION.

3. THE CONTRACTOR SHALL NOTIFY ALL AUTHORIZED INSPECTORS, SUPERINTENDENTS, OR PERSONS RESPONSIBLE FOR PUBLIC AND PRIVATE UTILITIES AFFECTED BY HIS/HER OPERATIONS PRIOR TO COMMENCING CONSTRUCTION.

4. CONTRACTOR SHALL AT ALL TIMES ALLOW ACCESS TO EXISTING DRIVEWAY OR PROVIDE/MAINTAIN ALTERNATIVE ALL–WEATHER ROUTES.

5. ALL TRAFFIC CONTROL DEVICES SHALL BE IN CONFORMANCE WITH TEXAS MANUAL OF UNIFORM TRAFFIC CONTROL DEVICES LATEST EDITION.

6. ANY DAMAGES TO FENCES, WALKS, OR PRIVATE PROPERTY SHALL BE REPAIRED BY THE CONTRACTOR AT HIS EXPENSE.

7. IN ACCORDANCE WITH HOUSE BILLS 662 AND 665 ENACTED BY THE TEXAS LEGISLATURE (70TH REGULAR LEGISLATIVE SESSION), THE CONTRACTOR SHALL MEET THE REQUIREMENTS FOR TRENCH SAFETY AS OUTLINED IN THE CURRENT VERSION OF THE UNITED STATES DEPARTMENT OF LABOR, OCCUPATIONAL SAFETY AND HEALTH ADMINISTRATION (OSHA) STANDARDS, 29 CFR, PART 1926, SUBPART P–EXCAVATIONS.

8. PRIOR TO COMMENCING ANY EXCAVATION, THE CONTRACTOR SHALL PROVIDE A TRENCH SAFETY PLAN. ALL PLANS SHALL BE PREPARED BY A PROFESSIONAL ENGINEER LICENSED TO PRACTICE IN THE STATE OF TEXAS. THE PLAN SHALL BE SUBMITTED TO THE OWNER FOR APPROVAL.

9. IN THE EVENT CONDITIONS ENCOUNTERED IN THE FIELD REQUIRE TRENCH SAFETY SYSTEMS OUTSIDE OF THE EXTENTS SUGGESTED TRENCH PROTECTION SHOWN ON THE CONSTRUCTION PLANS, ALL EXCAVATION SHALL CEASE AND THE CONTRACTOR SHALL IMMEDIATELY NOTIFY THE OWNER. THE CONTRACTOR SHALL BE RESPONSIBLE FOR SUBMITTING A REVISED TRENCH SAFETY PLAN. NO EXCAVATION SHALL RESUME UNTIL THE REVISED TRENCH SAFETY PLAN HAS BEEN APPROVED. (NO SEPARATE PAY)

10. THE CONTRACTOR SHALL ENSURE APPROVED TRENCH SAFETY PLANS ARE IMPLEMENTED. FAILURE TO ADHERE TO THE TRENCH SAFETY PLAN WILL RESULT IN A STOP WORK ORDER. NON–COMPLIANCE INCIDENTS MAY BE REPORTED TO OSHA.

11. TRENCHES OR EXCAVATIONS MAY NOT BE LEFT OPEN OVERNIGHT UNLESS AUTHORIZED IN WRITING BY THE OWNER. IN CASES WHERE TRENCHES ARE LEFT OPEN, THE CONTRACTOR MUST PROVIDE TRAFFIC–RATED, ANCHORED STEEL PLATE COVERS APPROVED BY THE OWNER.

12. CONTRACTOR SHALL PROTECT AND SUSPEND ALL EXISTING UTILITIES TO REMAIN.

13. ALL UTILITIES SHALL REMAIN IN SERVICE AT ALL TIMES. THE PROTECTION, TEMPORARY BYPASS PUMPING, ETC. OF ALL UTILITY LINES SHALL BE INCIDENTAL TO THE INSTALLATION OF THE PROPOSE UTILITIES. CONTRACTOR SHALL COORDINATE WITH UTILITY OWNERS.

WASTEWATER NOTES

1. ALL PIPE BEDDING MATERIAL SHALL CONFORM TO DETAILS AND THE MANUFACTURER'S RECOMMENDATION.

2. ALL INTERNAL CONCRETE SURFACES FOR WASTEWATER MANHOLES TO BE COATED PER MATERIALS AND PROCEDURES SPECIFIED IN CONTRACT SPECIFICATIONS AND DESIGN PLANS.

3. ALL MANHOLE COVERS SHALL BE 32" DIAMETER WATERTIGHT SANITARY SEWER MANHOLE FRAME AND COVER EAST JORDAN IRON WORKS MODEL V–1430A (OR APPROVED EQUAL) AND READ "BROWNSVILLE PUBLIC UTILITIES BOARD".

4. THE DISTANCE FROM TOP OF SANITARY SEWER MANHOLE CONE TO FINISHED GRADE TO BE 12" MINIMUM OR 18" MAX (AS PER DETAIL), UNLESS NOTED OTHERWISE ON PLANS.

5. EXISTING WASTEWATER LINES SHALL BE KEPT IN SERVICE UNTIL PROPOSED WASTEWATER SYSTEM IMPROVEMENTS HAVE BEEN COMPLETED AND APPROVED BY THE OWNER.

6. CONTRACTOR TO CONSTRUCT WASTEWATER GRAVITY MAIN FROM DOWNSTREAM END TO UPSTREAM END WITH BELLS FACING UPSTREAM.

7. ALL MANHOLES TO BE BENCHED IN THE DIRECTION OF FLOW TO MINIMIZE TURBULENCE.

8. ALL SEWER LINES, MANHOLES AND FORCE MAINS SHALL BE TESTED IN ACCORDANCE WITH TCEQ CHAPTER 217.57 REGULATIONS AND SPECIFICATION 33 31 11 – SANITARY SEWER PIPEWORK.

THE OWNER RETAINS THE RIGHTS TO TELEVISE THE LINE TO DETERMINE THE CONDITION OF THE SEWER LINE PRIOR TO FINAL ACCEPTANCE, IN ACCORDANCE WITH SPECIFICATION 33 31 11 – SANITARY SEWER PIPEWORK.

9. THE CONTRACTOR SHALL PERFORM QUALITY TESTING FOR THE WATER AND WASTEWATER SYSTEM INSTALLED AND AND SHALL PROVIDE ALL EQUIPMENT (INCLUDING PUMPS AND GAUGES), SUPPLIES AND LABOR NECESSARY TO PERFORM THE TESTS AT HIS EXPENSE. BROWNSVILLE P.U.B. TO BE GIVEN 48 HRS NOTICE PRIOR TO ALL TESTING AND SHALL BE MONITORED BY BROWNSVILLE PUB PERSONNEL. TESTING IS TO BE DONE IN ACCORDANCE WITH B.P.U.B. STANDARDS.

UTILITY TESTING NOTES

1. BROWNSVILLE PUBLIC UTILITY BOARD TO BE GIVEN 48 HOURS NOTICE PRIOR TO ALL TESTING OF WATER LINES. WASTEWATER LINES, AND DENSITY TESTING. REFER TO SPECIFICATION 02687 AND TCEQ NOTES FOR TESTING REQUIREMENTS. ALL TESTING TO BE CONDUCTED IN PRESENCE OF B.P.U.B. INSPECTOR.

2. ALL SANITARY SEWERS, EXCLUDING SERVICE LINES, SHALL BE MANDREL TESTED PER TEXAS COMMISSION ON ENVIRONMENTAL QUALITY CRITERIA. MANDREL TEST SHALL NOT BE PERFORMED UNTIL BACKFILL HAS BEEN IN PLACE FOR A MINIMUM OF 30 DAYS.

3. SOIL DENSITY TESTS AND RELATED SOIL ANALYSIS TESTS TO BE ACCOMPLISHED BY AN INDEPENDENT LABORATORY UNDER CONTRACT WITH THE OWNER. TESTS WHICH SHOW UNSATISFACTORY RESULTS ARE TO BE REPEATED AT THE EXPENSE OF THE CONTRACTOR SUBSEQUENT TO CONTRACTOR'S REMEDIAL ACTIVITIES.

4. DENSITY TESTING OF COMPACTED SUBGRADE MATERIAL FOR FIRST COURSE, AND SECOND COURSE OF COMPACTED BASE SHALL BE MADE AT ALL DRIVEWAYS AND INTERSECTING STREETS. IN ADDITION, ONE (1) DENSITY TEST PER LIFT PER FIVE HUNDRED (500) FEET OF INSTALLED PIPELINE SHALL BE CONDUCTED.

LEGEND

PROPOSED	EXISTING	
●	○ SSMH	SANITARY SEWERMANHOLE
	⊙ WV	GATE VALVE & BOX
	⊙ SSCO	SANITARY CLEAN OUT
	⊙ LP	LIGHT POLE
	⊡ EB	ELECTRIC BOX
	PP	POWER POLE
	GW	GUY WIRE
━━━━	——8 WW——	SAN. SEWER
━ ━ ━	— —6"W— —	WATER
→		DRAINAGE FLOW ARROW
+ FG100.00		FINISHED GRADE
+ FL100.00		FLOW LINE
▨	▨	CONCRETE PAVEMENT

BROWNSVILLE P.U.B.

WWTP VACTOR TRUCK FACILITY IMPROVEMENTS

HALFF

1075 PAREDES LINE ROAD, SUITE B
BROWNSVILLE, TEXAS 78526
TEL (956) 303-7100
TBPELS ENGINEERING FIRM #312

Revision		
No.	Date	Description

JOHN W. CLINT
85417
10/30/2020

Project No.:	37387.001
Issued:	10/30/2020
Drawn By:	JG
Checked By:	JWC/RM
Scale:	AS NOTED

Sheet Title
GENERAL NOTES

C1-1
Sheet Number

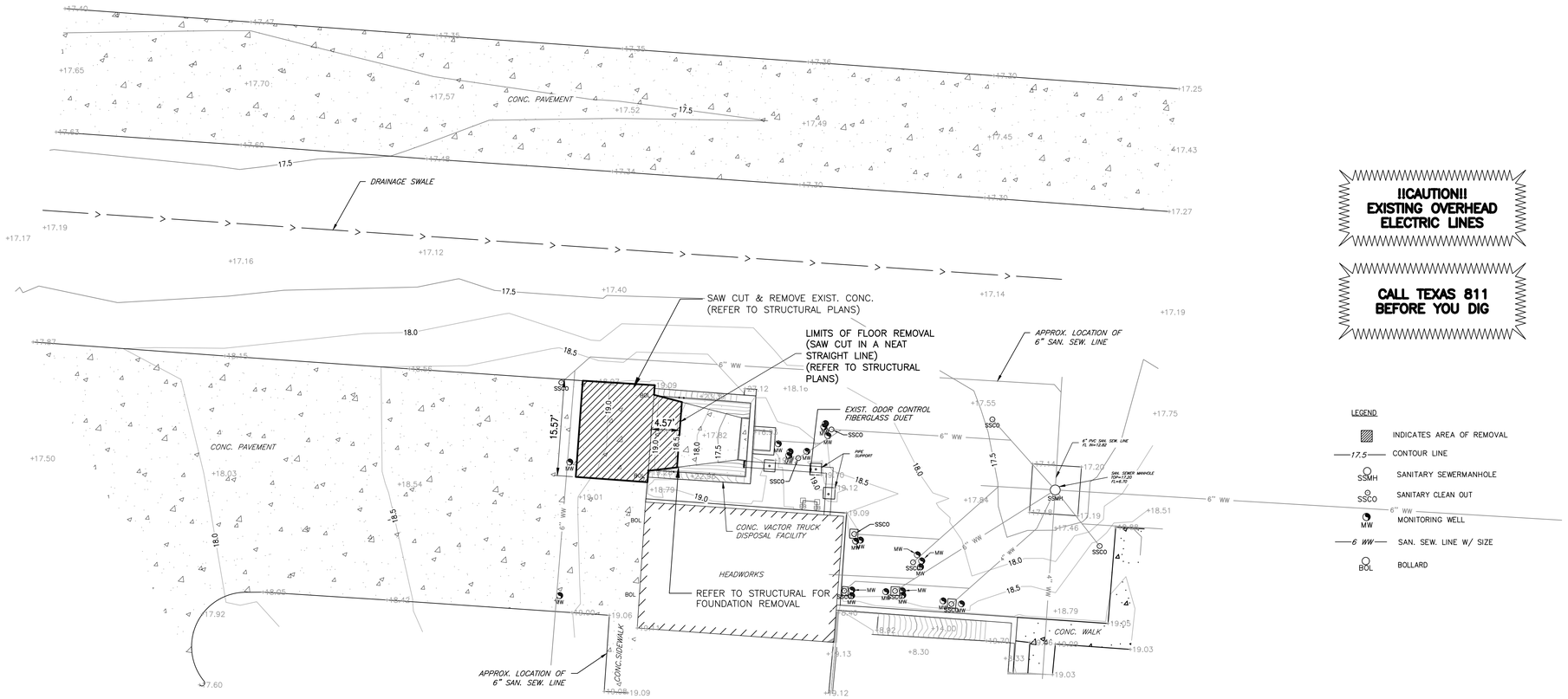

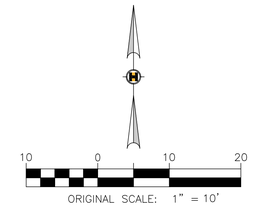

!!CAUTION!!
EXISTING OVERHEAD ELECTRIC LINES

CALL TEXAS 811 BEFORE YOU DIG

LEGEND

- INDICATES AREA OF REMOVAL
- 17.5 — CONTOUR LINE
- SSMH — SANITARY SEWERMANHOLE
- SSCO — SANITARY CLEAN OUT
- MW — MONITORING WELL
- 6 WW — SAN. SEW. LINE W/ SIZE
- BOL — BOLLARD

NOTES:

LOCATION OF EXISTING UTILITIES SHALL BE FIELD VERIFIED PRIOR TO CONSTRUCTION

BROWNSVILLE P.U.B.

WWTP VACTOR TRUCK FACILITY
IMPROVEMENTS

HALFF
1101 PARKENS, LINE 6 ROAD, SUITE B
BROWNSVILLE, TEXAS 78526
TEL (956) 303-7100
TBPELS ENGINEERING FIRM #312

Revision No.	Date	Description

STATE OF TEXAS
JOHN W. CLINT
85417
LICENSED
PROFESSIONAL ENGINEER
10/30/2020

Project No.:	37387.001
Issued:	10/30/2020
Drawn By:	JG
Checked By:	JWC/RM
Scale:	AS NOTED

Sheet Title

EXISTING TOPOGRAPHY

C1-2

Sheet Number

PLOT DATE: 10/30/2020 3:22 PM

PLOT DATE: 10/30/2020 3:20 PM G:\ACAD\PROJECTS\C-3-D\37387.001.DWG

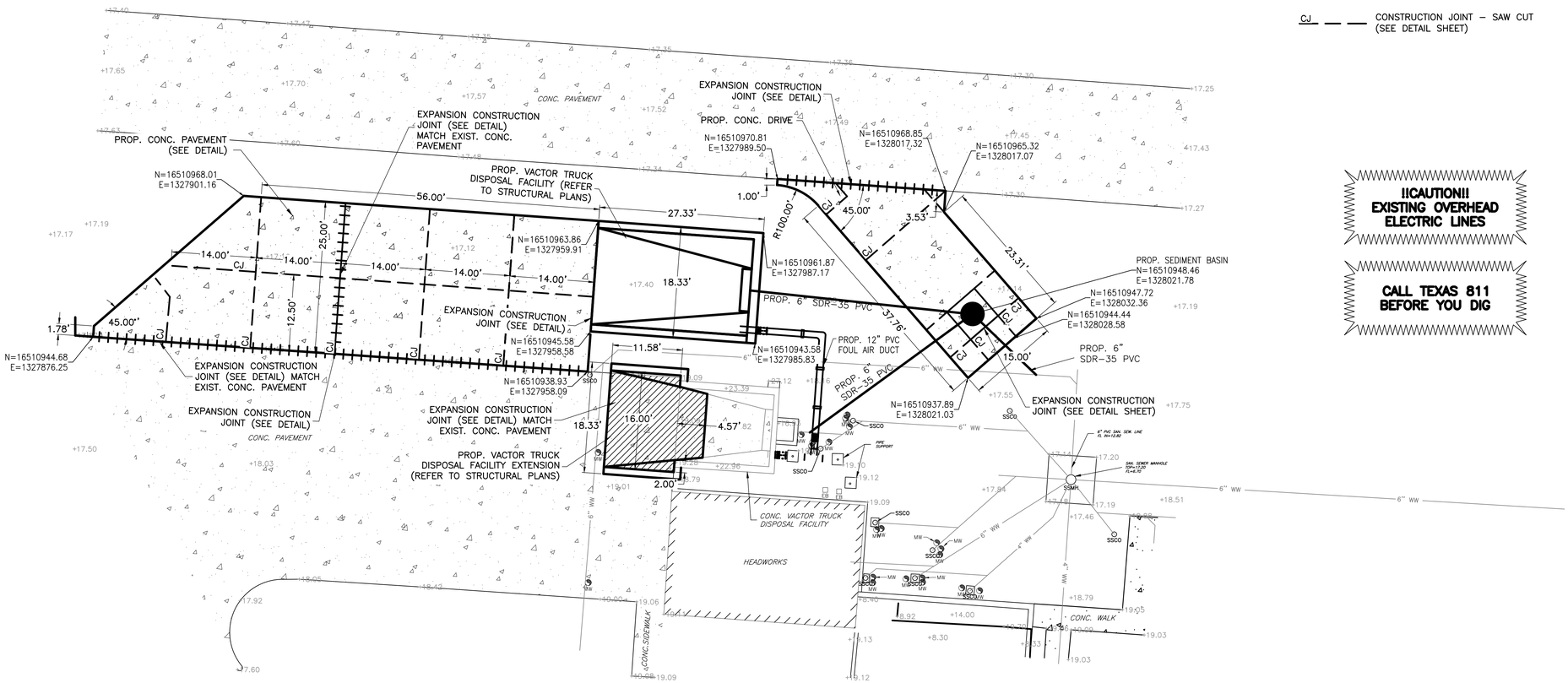

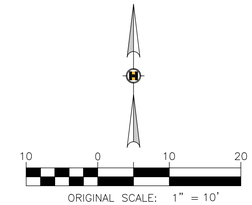

CJ — — — CONSTRUCTION JOINT – SAW CUT (SEE DETAIL SHEET)

!!CAUTION!!
EXISTING OVERHEAD ELECTRIC LINES

CALL TEXAS 811 BEFORE YOU DIG

BROWNSVILLE P.U.B.

WWTP VACTOR TRUCK FACILITY IMPROVEMENTS

HALFF
1101 PARKSIDE LANE S.ROAD, SUITE B
BROWNSVILLE, TEXAS 78526
TEL (956) 303-7100
TBPELS ENGINEERING FIRM #312

Revision		
No.	Date	Description

STATE OF TEXAS
JOHN W. CLINT
85417
LICENSED PROFESSIONAL ENGINEER
10/30/2020

Project No.:	37387.001
Issued:	10/30/2020
Drawn By:	JG
Checked By:	JWC/RM
Scale:	AS NOTED

Sheet Title

DIMENSION CONTROL

C1-3

Sheet Number

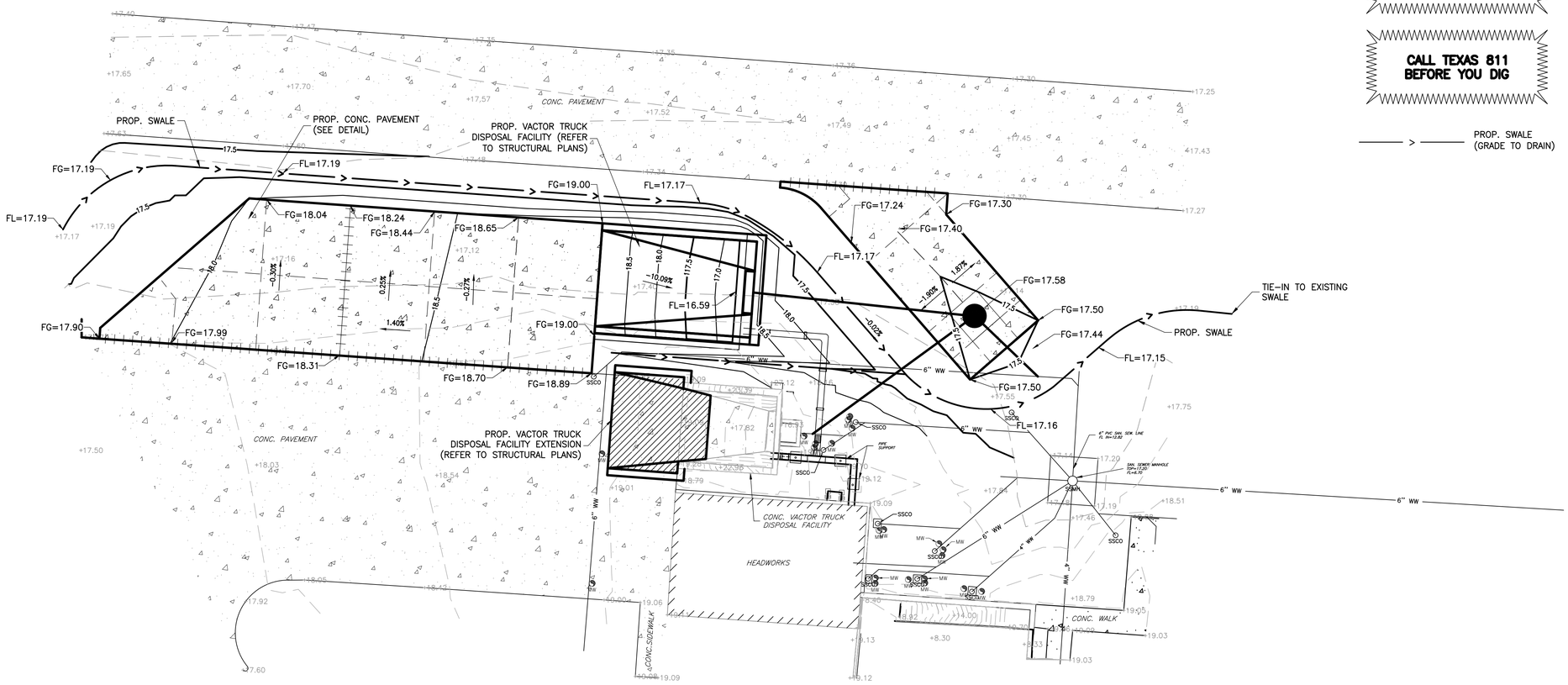

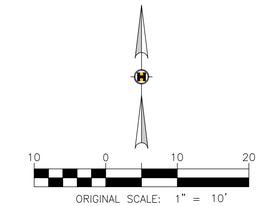

!!CAUTION!!
EXISTING OVERHEAD ELECTRIC LINES

CALL TEXAS 811 BEFORE YOU DIG

PROP. SWALE (GRADE TO DRAIN)

BROWNSVILLE P.U.B.

WWTP VACTOR TRUCK FACILITY IMPROVEMENTS

HALFF
1101 PARKENS, LINE 8 ROAD, SUITE B
BROWNSVILLE, TEXAS 78526
TEL (956) 303-7100
TBPELS ENGINEERING FIRM #312

Revision No.	Date	Description

STATE OF TEXAS
JOHN W. CLINT
85517
LICENSED PROFESSIONAL ENGINEER
10/30/2020

Project No.:	37387.001
Issued:	10/30/2020
Drawn By:	JG
Checked By:	JWC/RM
Scale:	AS NOTED

Sheet Title

GRADING PLAN

C1-4

Sheet Number

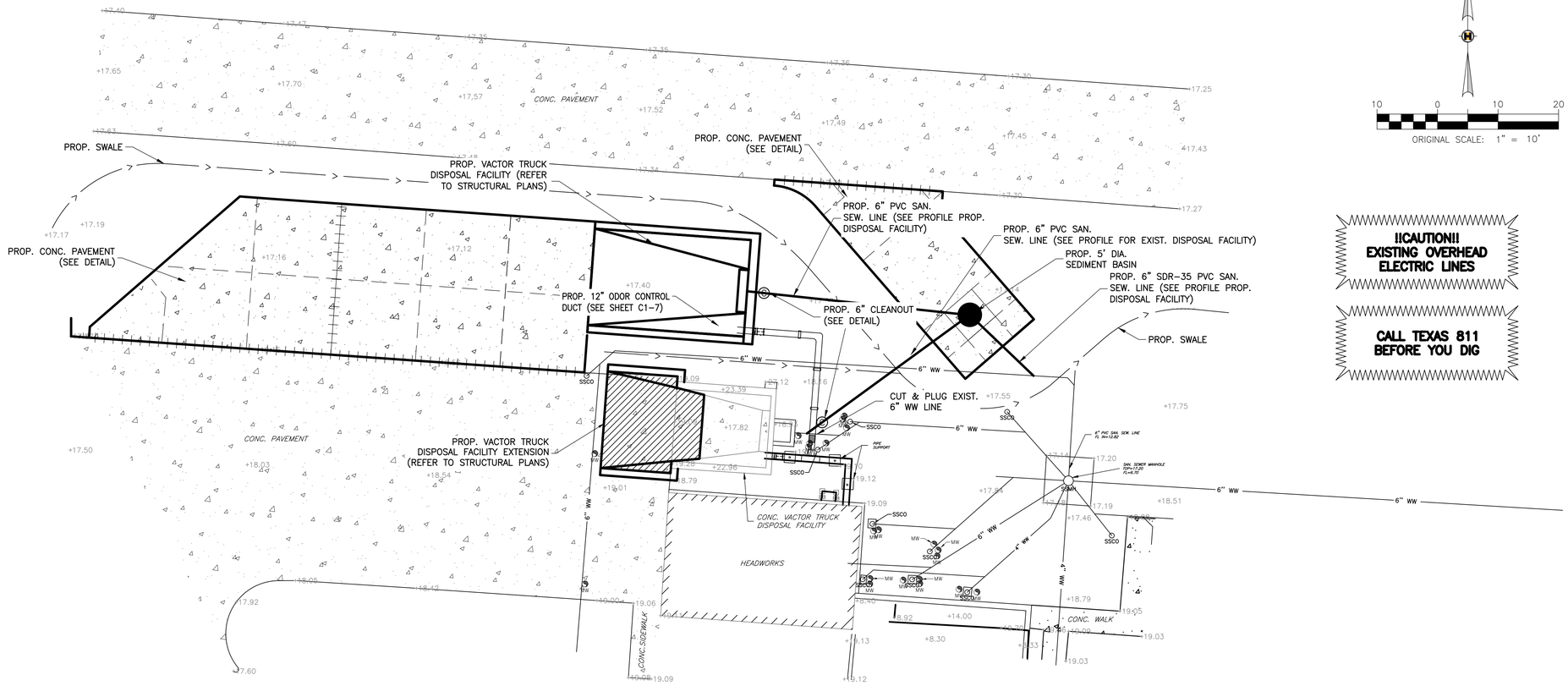

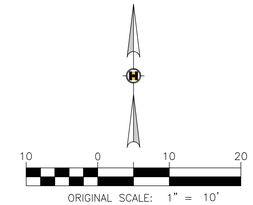

!!CAUTION!!
EXISTING OVERHEAD ELECTRIC LINES

CALL TEXAS 811 BEFORE YOU DIG

NOTE: LOCATION OF EXISTING UTILITIES SHALL BE FIELD VERIFIED PRIOR TO CONSTRUCTION

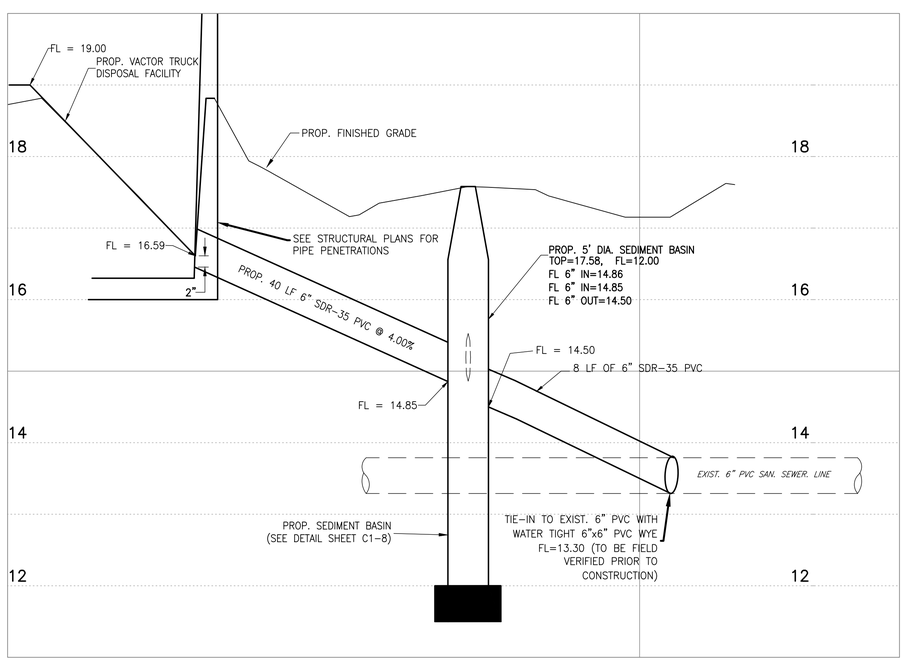

PROFILE FOR PROP. DISPOSAL FACILITY
SCALE: HORZ. 1" = 10'
VERT. 1" = 1'

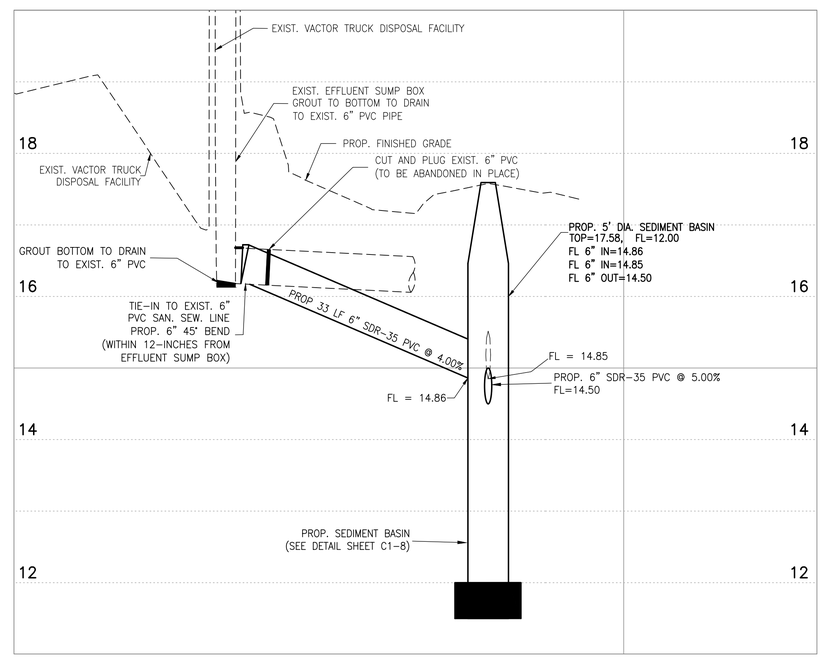

PROFILE FOR EXIST. DISPOSAL FACILITY
SCALE: HORZ. 1" = 10'
VERT. 1" = 1'

*EFFLUENT SUMP BOX SHALL BE CLEANED, POWER WASHED AND BACKFILLED WITH NON-SHRINK GROUT. GROUT SHALL BE INSTALLED TO DRAIN TO EXIST. 6" PIPE.

BROWNSVILLE P.U.B.

WWTP VACTOR TRUCK FACILITY IMPROVEMENTS

HALFF
1101 PARKENS, LINE 5 ROAD, SUITE B
BROWNSVILLE, TEXAS 78526
TEL (956) 303-7100
TBPELS ENGINEERING FIRM #312

Revision No.	Date	Description

STATE OF TEXAS
JOHN W. CLINT
85417
LICENSED PROFESSIONAL ENGINEER
10/30/2020

Project No.:	37387.001
Issued:	10/30/2020
Drawn By:	JG
Checked By:	JWC/RM
Scale:	AS NOTED

Sheet Title
UTILITY PLAN

C1-5
Sheet Number

PLOT DATE: 11/02/2020 3:23 PM

PROP. VACTOR TRUCK DISPOSAL FACILITY (REFER TO STRUCTURAL PLANS)

PROP. PIPE WALL PENETRATION FLANGED FITTING (SEE DETAIL)

PROP. 12" DIAMETER ISOLATION/BALANCING DAMPER (SEE DETAIL SHEET C1-8)

PROP. 12" PVC AIR DUCT

PROPOSED AIR DUCT PIPE SUPPORT (SEE DETAIL SHEET C1-8)

PROP. 12" FRP AIR DUCT

1% SLOPE

PROP. EXPANSION JOINT

PROP. TIE-IN TO EXIST. AIR DUCT

PIPE SUPPORT

EXIST. 12" FRP AIR DUCT

PROP. VACTOR TRUCK DISPOSAL FACILITY EXTENSION (REFER TO STRUCTURAL PLANS)

PROP. 12" DIAMETER ISOLATION/BALANCING DAMPER (SEE DETAIL SHEET C1-8)

CONC. VACTOR TRUCK DISPOSAL FACILITY

6" PVC SAN. SEW. LINE FL IN=12.82

SAN. SEWER MANHOLE TOP=17.20 FL=6.70

ORIGINAL SCALE: 1" = 5'

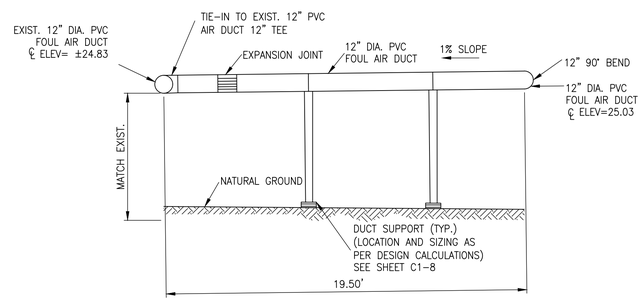

PROFILE FOR PROP. AIR DUCT SECTION "A"
NTS

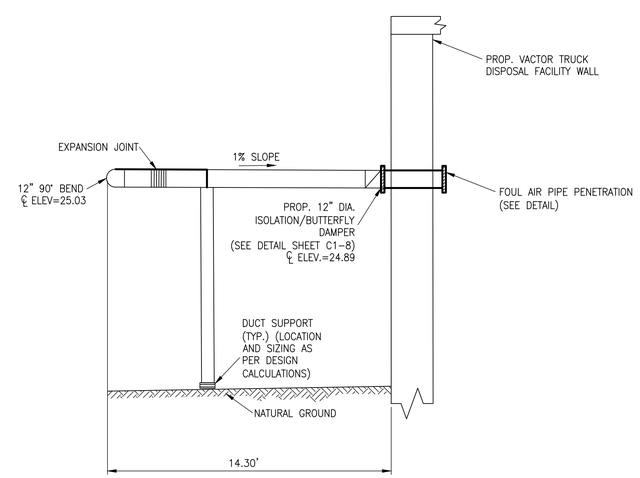

PROFILE FOR PROP. AIR DUCT SECTION "B"
NTS

!!CAUTION!!
EXISTING OVERHEAD ELECTRIC LINES

CALL TEXAS 811 BEFORE YOU DIG

BROWNSVILLE P.U.B.

WWTP VACTOR TRUCK FACILITY IMPROVEMENTS

HALFF
1101 PARKENS, LINE 8 ROAD, SUITE B
BROWNSVILLE, TEXAS 78520
TEL (956) 303-7100
TBPELS ENGINEERING FIRM #312

Revision No.	Date	Description

STATE OF TEXAS
JOHN W. CLINT
85417
LICENSED PROFESSIONAL ENGINEER
10/30/2020

Project No.:	37387.001
Issued:	10/30/2020
Drawn By:	JG
Checked By:	JWC/RM
Scale:	AS NOTED

Sheet Title

ODOR CONTROL PLAN

C1-6

Sheet Number

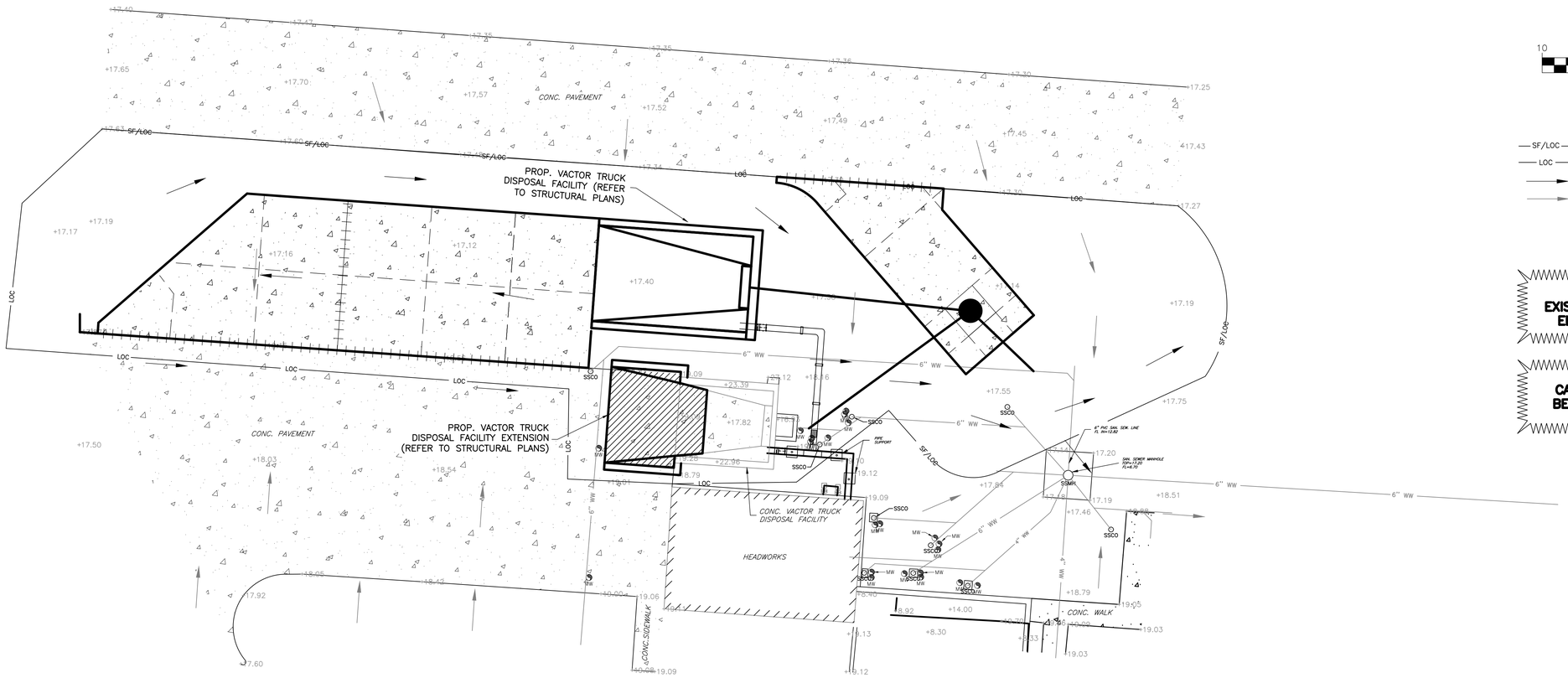

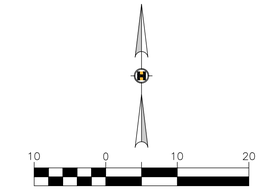

SF/LOC — SILT FENCE/LIMITS OF CONSTRUCTION

LOC — LIMITS OF CONSTRUCTION

PROP. RUNOFF

EXIST. RUNOFF

!!CAUTION!!
EXISTING OVERHEAD ELECTRIC LINES

CALL TEXAS 811 BEFORE YOU DIG

EROSION CONTROL NOTES:

1. CONTRACTOR SHALL OBTAIN A SWPPP PERMIT AND POST IT AT THE CONSTRUCTION SITE, IN ACCORDANCE WITH SPECIFICATION 01 57 23 TEMPORARY EROSION AND SEDIMENTATION CONTROL AND 01 57 23 – TDPES REQUIREMENTS, PRIOR TO CONSTRUCTION.

2. ALL EROSION AND SEDIMENT CONTROL MEASURES SHALL BE IN PLACE PRIOR TO COMMENCING ANY EARTH DISTURBING ACTIVITY.

3. ALL EFFORTS SHALL BE MADE TO CONTAIN DISTURBED SOILS WITHIN THE EXTENTS OF PERIMETER EROSION AND SEDIMENT CONTROL MEASURES.

4. THE CONTRACTOR SHALL SEQUENCE ALL CONSTRUCTION IN SUCH A MANNER AS TO MINIMIZE THE AMOUNT AND EXTENTS OF DISTURBED EARTH.

5. A STABILIZED CONSTRUCTION EXIT IS REQUIRED AT ALL POINTS OF DESIGNATED EGRESS FROM THE LIMITS OF CONSTRUCTION. THE CONTRACTOR SHALL BE RESPONSIBLE FOR DETERMINING THE LOCATION(S) UNLESS OTHERWISE NOTED ON THE PLANS. THE LOCATION(S) OF THE STABILIZED CONSTRUCTION EXIT(S) MAY BE MODIFIED WITH RESPECT TO THE SEQUENCE OF CONSTRUCTION.

6. ALL EROSION AND SEDIMENT CONTROL MEASURES SHALL BE PROPERLY MAINTAINED DURING THE COURSE OF THEIR INTENDED USE.

7. ALL STAGING, MATERIAL STORAGE, STOCKPILE AND REFUSE AREAS SHALL REQUIRE APPLICABLE EROSION AND SEDIMENT CONTROL MEASURES.

8. ALL CONSTRUCTION DEBRIS SHALL BE CONTAINED WITHIN APPROPRIATE RECEPTACLES (ROLL–OFF CONTAINERS, DUMPSTERS, TRASH CANS, WIRE–MESH CAGES, ETC.) AND CONFINED WITHIN PERIMETER EROSION AND SEDIMENT CONTROLS.

9. ALL EROSION AND SEDIMENT CONTROL MEASURES SHALL REMAIN IN PLACE DURING THE COURSE OF EARTH DISTURBING ACTIVITY AND UNTIL FINAL STABILIZATION IS ACHIEVED. STRUCTURAL MEASURES MAY BE REMOVED ONLY UPON FINAL PROJECT ACCEPTANCE BY THE OWNER OR AS DIRECTED BY THE OWNER.

10. PERMANENT STABILIZATION SHALL BEGIN AS SOON AS PRACTICABLE OR AS DIRECTED BY THE OWNER.

11. DUST CONTROL SHALL BE IMPLEMENTED AS NECESSARY OR AS DIRECTED BY THE OWNER. DUST CONTROL MAY CONSIST OF WATERING OR OTHER METHODS APPROVED BY THE OWNER. DUST CONTROL AND ASSOCIATED WATERING OR OTHER METHOD SHALL BE SUBSIDIARY TO THE EROSION CONTROL BID ITEM IN THE UNIT PRICE SCHEDULE.

12. TRACKED DEBRIS SHALL BE SWEPT AT THE END OF EACH WORKDAY OR AS DIRECTED BY THE OWNER.

13. ALL DISCHARGES ASSOCIATED WITH DEWATERING OPERATIONS SHALL IMPLEMENT APPROPRIATE EROSION AND SEDIMENT CONTROL MEASURES. MEASURES MAY INCLUDE BUT ARE NOT LIMITED TO SEDIMENTATION BASINS OR FILTER SOCKS.

14. CONCRETE WASH–WATER SHALL NOT BE DISCHARGED DIRECTLY INTO A STORM SEWER SYSTEM OR RECEIVING STREAM. ALL WASH ACTIVITIES MUST BE PERFORMED WITHIN THE EXTENTS OF ESTABLISHED EROSION AND SEDIMENT CONTROL MEASURES OR DESIGNATED AREAS APPROVED BY THE OWNER.

15. SEDIMENT SHALL BE CLEARED FROM ALL STORM SEWER PIPES, CULVERTS AND APPURTENANCES WITHIN THE LIMITS OF CONSTRUCTION PRIOR TO FINAL PROJECT ACCEPTANCE. SEDIMENT SHALL BE PROPERLY DISPOSED.

16. STAGING, STOCKPILE AND EQUIPMENT STORAGE AREAS SHALL NOT BE LOCATED WITHIN THE EXTENTS OF ANY TREE DRIPLINES.

STORM WATER POLLUTION PREVENTION PLAN INFORMATION

NATURE OF CONSTRUCTION ACTIVITY
* CONSTRUCTION OF PROP. VACTOR TRUCK DISPOSAL STRUCTURE

SEQUENCE OF MAJOR ACTIVITIES
* REMOVE PORTION OF EXIST. CONC. DRIVE
* EXCAVATE FOR STRUCTURE PADS
* PLACE SELECT FILL FOR STRUCTURE PADS
* CONSTRUCTION OF VACTOR TRUCK STRUCTURE
* INSTALL UNDERGROUND UTILITIES & 5' DIA. SEDIMENT BASIN
* INSTALL CONC. DRIVES
* CLEAN UP
* FINAL GRADING

AREA OF SITE
* TOTAL AREA OF DISTURBANCE: 0.18 ACRES

SOIL DESCRIPTION:
* BENITO CLAY, PONDED

SITE PLAN SHOWS THE FOLLOWING:
* GENERAL DRAINAGE PATTERNS (EXISTING AND PROPOSED)
* AREAS OF SOIL DISTURBANCE
* LOCATIONS OF MAJOR STRUCTURAL / NON–STRUCTURAL CONTROLS
* LOCATIONS WHERE STABILIZATION PRACTICES ARE TO OCCUR

NAME OF RECEIVING WATERS
CAMERON COUNTY DRAINAGE DISTRICT #1 DITCH NO. 1

BMP'S TO BE IMPLEMENTED
* DURING CONSTRUCTION, SILT FENCING OR EROSION CONTROL LOGS SHALL BE ERECTED AND MAINTAINED WHERE SHOWN TO MINIMIZE ESCAPE OF SEDIMENT INTO STORM SEWER SYSTEM.

NOTES:

1. THIS IS NOT A STORM WATER POLLUTION PREVENTION PLAN. CONTRACTOR MUST PROVIDE HIS OPERATION'S SPECIFIC INFORMATION AS PER THE TCEQ PERMIT AND THE SPECIFICATIONS. INCLUDE ALL DOCUMENTATION AND CERTIFICATIONS AS PER THE TCEQ PERMIT

2. STABILIZED CONSTRUCTION ENTRANCE/EXIT LOCATIONS SHALL BE DETERMINED BY THE CONTRACTOR.

BROWNSVILLE P.U.B.
WWTP VACTOR TRUCK FACILITY IMPROVEMENTS

HALFF
1101 PARKENS, LNE 5 ROAD, SUITE B
BROWNSVILLE, TEXAS 78526
TEL (956) 303-7100
TBPELS ENGINEERING FIRM #312

Revision No.	Date	Description

STATE OF TEXAS
JOHN W. CLINT
85417
LICENSED PROFESSIONAL ENGINEER
10/30/2020

Project No.:	37387.001
Issued:	10/30/2020
Drawn By:	JG
Checked By:	JWC/RM
Scale:	AS NOTED

Sheet Title
MINIMUM SUGGESTED EROSION CONTROL MEASURES

C1-7
Sheet Number

PLOT DATE: 11/2/2020 3:23 PM

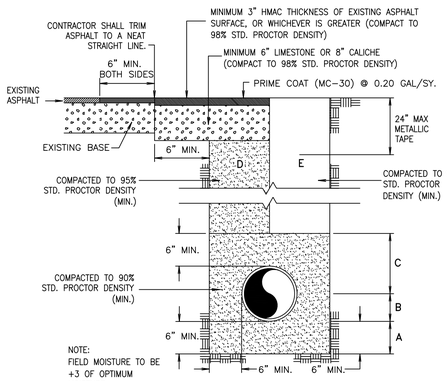

TYPICAL PIPE BEDDING AND TRENCH BACKFILL DETAIL

NOT TO SCALE

A BANK RUN SAND PLACED BEFORE PIPE IS LAID UP TO FLOW LINE OF PIPE (MIN. THICKNESS = 6").

B BANK RUN SAND BACKFILL PLACED AFTER PIPE IS LAID FROM BOTTOM OF PIPE TO SPRING LINE OF PIPIE (4" LIFTS, HAND TAMPED).

C BANK RUN SAND BACKFILL PLACED FROM SPRING LINE OF PIPE TO 6" ABOVE TOP OF PIPE (6" LIFTS, HAND TAMPED).

D BANK RUN SAND BACKFILL, CLASS "A" (6" LIFTS, MECHANICAL COMPACTION).

E EARTH BACKFILL, CLASS "B" (12" LIFTS, MECHANICAL COMPACTION).

FOUNDATION PREPERATION (WELLPOINTS, GRAVEL OR CEMENT STABILIZATION, OR APPROVED SUBSTITUTE) SHALL BE REQUIRED WHEN TRENCH BOTTOM IS STABLE.

BACKFILL AT STRUCTURES SHALL BE PLACED IN UNIFORM LAYERS,MOISTENED AS REQUIRED TO APPROXIMATE OPTIMUM MOISTURE CONTENT, AND COMPACTED TO 95% STD. PROCTOR DENSITY. THE THICKNESS OF EACH LOOSE LAYER SHALL NOT EXCEED 6". STRUCTURE BACKFILL MATERIAL SHALL BE SAND, APPROVED SITE SOIL, OR OTHER APPROVED.

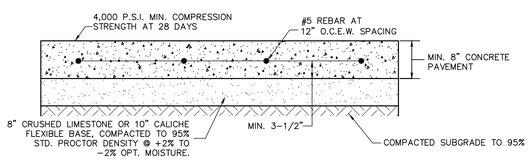

NOTES:

1. CONSTRUCTION JOINTS SHALL BE CONSTRUCTED UP TO 15' EACH DIRECTION WITH ISOLATION (EXPANSION) JOINTS NOT TO EXCEED 75', EXCEPT WHERE NOTED.

2. REINFORCED CONCRETE – CONCRETE SHALL MEET A MINIMUM 28-DAY COMPRESSIVE STRENGTH OF 3,200 PSI FOR LIGHT DUTY PAVEMENTS AND 4,000 PSI FOR MEDIUM AND HEAVY DUTY PAVEMENTS AND A MAXIMUM WATER/CEMENT RATIO OF 0.45. THE CONCRETE FOR CONCRETE PAVING SHALL MEET THE REQUIREMENTS FOR CLASS P CONCRETE OF TXDOT 2014 SPECIFICATION ITEMS 360 AND 421. AGGREGATES USED IN THE CONCRETE DESIGN SHOULD MEET THE REQUIREMENTS OF TXDOT 2014 SPECIFICATION ITEM 421 OR ASTM C33.

CONCRETE PAVEMENT DETAIL

NOT TO SCALE

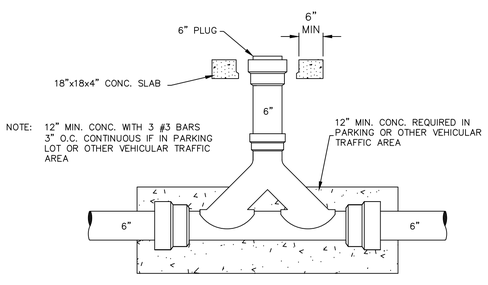

SINGLE BARREL CLEAN-OUT

N.T.S.

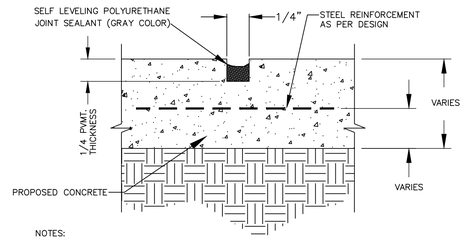

NOTES:

1. PLACE JOINT SEALANT FLUSH OR SLIGHTLY BELOW TOP OF PAVEMENT. DO NOT MOUND MATERIAL ABOVE PAVEMENT.
2. CONTRACTION (DUMMY) JOINT MAY BE TOOLED OR SAW CUT JOINTS.
3. CONTRACTION (DUMMY) JOINT SHALL BE SAWED WITHIN 48 HOURS OF CONCRETE PLACEMENT.

CONSTRUCTION JOINT – SAW CUT

N.T.S.

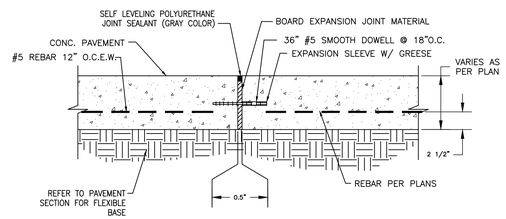

NOTES:

1. PLACE JOINT SEALANT FLUSH OR SLIGHTLY BELOW TOP OF PAVEMENT. DO NOT MOUND MATERIAL ABOVE PAVEMENT.
2. JOINTS WILL CONSIST OF BOARD EXPANSION JOINT MATERIAL AND SELF LEVELING POLYURETHANE SEALANT (GRAY COLOR) WITH 3-36"#5 SMOOTH DOWELS, ONE END GREASED AND WRAPPED.
3. CARE MUST BE TAKEN THAT THE DOWELS ARE STRAIGHT AND LAID PARALLEL WITH CURB AND NO CONCRETE "PLUGS" OR OTHER MATERIAL BE ALLOWED THROUGH THE DOWEL HOLES OR EXPANSION MATERIAL THAT WOULD PREVENT JOINT FROM OPERATING AS AN EXPANSION JOINT

EXPANSION CONSTRUCTION JOINT

N.T.S.

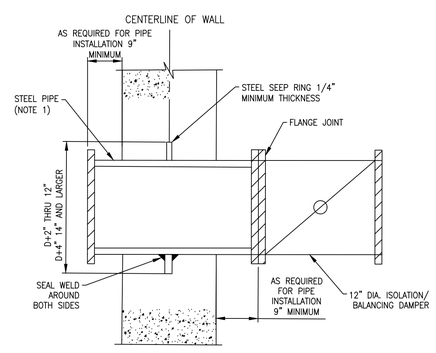

NOTES:

1. AT FOUL AIR APPLICATION WALL PIPE TO BE SCH 40, TYPE 316 S.S WELD SEEP RING TO WALL W/MIN 1/4" FILLET WELD, CONTINUOUS BOTH SIDES, FLANGE DIMENSIONS & BOLT PATTERN TO MATCH FA DUCT.

FOUL AIR PIPE WALL PENETRATION

N.T.S.

NOTES:

1. OVERHEAD COILING DOOR SHALL BE MANUFACTURED BY OVERHEAD DOOR CORPORATION (MODEL 610) OR KINNEAR, DIVISION OF WAYNE-DALTON CORPORATION (MODEL 800) OR APPROVED EQUAL.
2. ALL COMPONENTS SHALL BE CONSISTENT WITH THE CORROSIVE ENVIRONMENTAL CONDITIONS DUE TO HIGH HUMIDITY AND THE PRESENCE OF HYDROGEN SULFIDE. CURTAIN SHALL BE INTERLOCKING FLAT SLATS OF 16-GAUGE (B & S) MINIMUM ASTM B209, 5052-H32 ALUMINUM ALLOY. SLIDE GUIDES, BRACKETS, GEARS, BARREL AND OTHER COMPONENTS SHALL BE STAINLESS STEEL 316, ALUMINUM ALLOY OR OTHER MATERIAL RESISTANT TO THE ENVIRONMENTAL CONDITIONS.
3. COMPLETE ASSEMBLY AND ANCHORAGE TO BUILDING SHALL WITHSTAND THE WIND LOAD REQUIREMENTS DESCRIBED IN THE GENERAL STRUCTURAL NOTES.
4. THE MANUFACTURER SHALL PROVIDE SHOP DRAWINGS AND CALCULATIONS FOR THE OVERHEAD DOOR, ANCHORING SYSTEM AND OTHER DOOR COMPONENTS MEETING THE ABOVE REQUIREMENTS AND ANY REQUIREMENTS SET FORTH IN THE SPECIFICATIONS. DESIGN CALCULATIONS AND SHOP DRAWINGS SHALL BE PREPARED AND SEALED BY A REGISTERED PROFESSIONAL ENGINEER IN THE STATE WHERE THE WORK IS INSTALLED.

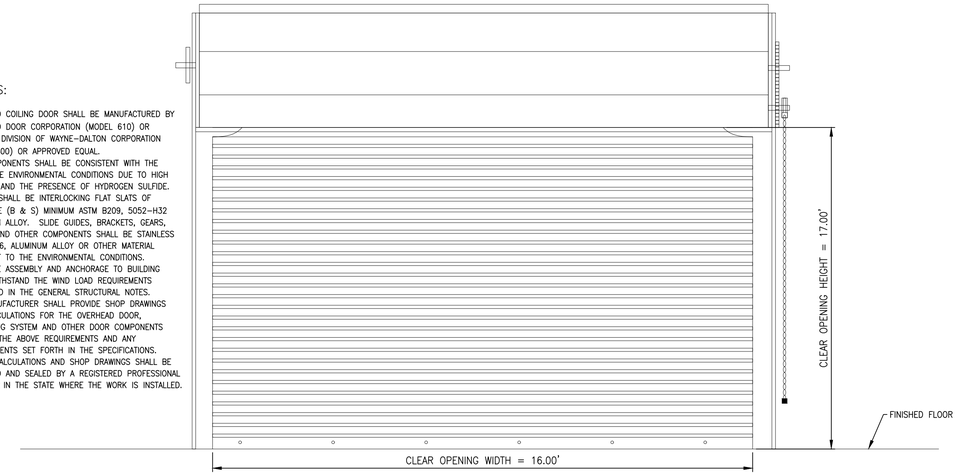

OVERHEAD COILING DOOR

N.T.S.

NOTES:

1. SUBMIT FINAL DESIGN AND CALCULATIONS FOR SUPPORT AND ANCHORAGE AS SPECIFIED
2. WHERE NO SLAB EXISTS, PROVIDE 18" THICK 3'-4" SQUARE, CONCRETE PAD WITH 4-#4 REINFORCING BARS, EQUAL SPACED, EACH WAY, TOP AND BOTTOM. SET TOP OF PAD 3" ABOVE FINAL GRADE

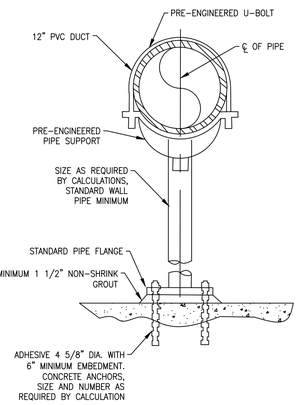

DIMENSION TABLE	
PIPE SIZE	"A" MINIMUM NORMAL PIPE SIZE
2-1/2"	2-1/2"
3"	2-1/2"
4"	3"
5"	3"
6"	3"
8"	3"
10"	3"
12"	3"
14"	3"
16"	3"
20"	4"
24"	4"

DUCT SUPPORT
SADDLE SUPPORT PEDESTAL TYPE-NON-ADJUSTABLE

N.T.S.

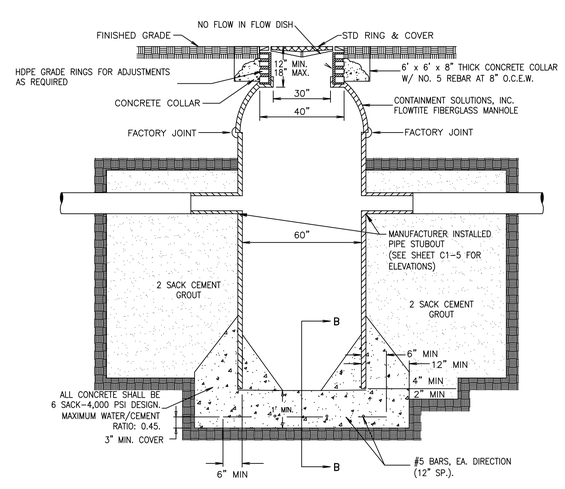

PROP. SEDIMENT BASIN
SECTION A-A

NOT TO SCALE

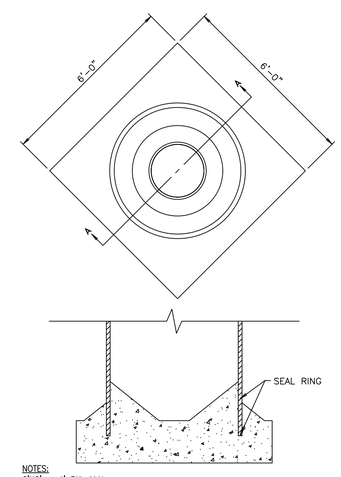

NOTES:
6'X6' – 4' DIA. M.H.
7'X7' – 5' DIA. M.H.
8'X8' – 6' DIA. M.H.

SECTION B-B

NOT TO SCALE

BROWNSVILLE P.U.B.

WWTP VACTOR TRUCK FACILITY IMPROVEMENTS

HALFF
1201 PARKWAY, LAKE DRIVE, SUITE B
BROWNSVILLE, TEXAS 78526
TEL (956) 303-7100
TBPELS ENGINEERING FIRM #312

Revision		
No.	Date	Description

STATE OF TEXAS
JOHN W. CLINT
85417
LICENSED
PROFESSIONAL ENGINEER
10/30/2020

Project No.:	3738.001
Issued:	10/30/2020
Drawn By:	JG
Checked By:	JWC/RM
Scale:	AS NOTED
Sheet Title	DETAILS
Sheet Number	C1-8

PLOT DATE: 11/02/2020 3:20 PM

PLOT DATE: 11/2/2020 3:20 PM

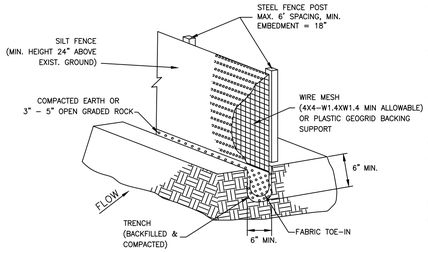

ISOMETRIC VIEW

SILT FENCE DETAIL

NTS

SILT FENCE NOTES:

1. STEEL POSTS WHICH SUPPORT THE SILT FENCE SHALL BE INSTALLED WITH A SLIGHT ANGLE TOWARD THE ANTICIPATED RUNOFF SOURCE. POST MUST BE EMBEDDED A MINIMUM OF 18".
2. THE TOE OF THE SILT FENCE SHALL BE TRENCHED IN WITH A SPADE OR MECHANICAL TRENCHER, SO THAT THE DOWNSLOPE FACE OF THE TRENCH IS FLAT AND PERPENDICULAR TO THE LINE OF FLOW. WHERE FENCE CANNOT BE TRENCHED IN WEIGHT FABRIC FLAP WITH WASHED GRAVEL ON UPHILL SIDE, AS NECESSARY, TO PREVENT FLOW UNDER FENCE.
3. THE TRENCH MUST BE A MINIMUM OF 6 INCHES DEEP AND 6 INCHES WIDE TO ALLOW FOR THE SILT FENCE FABRIC TO BE LAID IN THE GROUND AND BACKFILLED.
4. SILT FENCE SHOULD BE SECURELY FASTENED TO EACH STEEL SUPPORT POST OR TO BACKING SUPPORT, WHICH IS IN TURN ATTACHED TO THE STEEL FENCE POST. FABRIC SHALL OVERLAP AT ABUTTING ENDS A MINIMUM OF 3 FEET AND SHALL BE JOINED SUCH THAT NO BYPASS OR LEAKAGE OCCURS.
5. INSPECTION SHALL BE MADE WEEKLY OR AFTER EACH RAINFALL. REPAIR OR REPLACEMENT SHALL BE MADE PROMPTLY AS NEEDED.
6. SILT FENCE SHALL BE REMOVED WHEN THE SITE IS COMPLETELY STABILIZED SO AS NOT TO BLOCK OR IMPEDE STORM FLOW OR DRAINAGE.
7. ACCUMULATED SILT SHALL BE REMOVED WHEN IT REACHES A DEPTH OF 6 INCHES. THE SILT SHALL BE DISPOSED OF IN AN APPROVED SITE AND IN SUCH A MANNER AS TO NOT CONTRIBUTE TO ADDITIONAL SILTATION.
8. ALL INLETS SHALL BE ENCIRCLED WITH SILT FENCE OR EROSION CONTROL LOGS.
9. IF EROSION CONTROL DEVICES INTERFERE WITH CONSTRUCTION, THEY MAY BE TEMPORARILY REMOVED UNTIL THAT PORTION OF WORK IS COMPLETE. EROSION CONTROL DEVICES MUST BE IN PLACE AT ALL OTHER TIMES.
10. THE CONTRACTOR SHALL BE RESPONSIBLE FOR THE SUBMITTAL OF A STORM WATER POLLUTION PREVENTION PLAN (SWPPP) THAT SUPPLEMENTS THE INFORMATION PROVIDED IN THE DESIGN PLANS. THE SWPPP INFORMATION PROVIDED IN THE DESIGN PLANS DOES NOT MEET THE REQUIREMENTS SET FORTH IN THE TCEQ GENERAL PERMIT. THIS INFORMATION AND DETAILS ARE ONLY FOR INFORMATIONAL PURPOSES ONLY. (REFER TO SPECIFICATION 02370 – TPDES REQUIREMENTS).

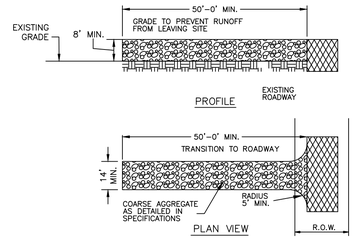

STABILIZED CONSTRUCTION EXIT

NTS

CONSTRUCTION ENTRANCE/EXIT NOTES

1. LENGTH SHALL BE AS SHOWN ON THE CONSTRUCTION DRAWINGS, BUT NOT LESS THAN 50 FEET.
2. STONE SHALL BE 3 TO 5 INCH DIAMETER CRUSHED ROCK OR ACCEPTABLE CRUSHED CONCRETE. THICKNESS SHALL NOT BE LESS THAN 8 INCHES.
3. WIDTH SHALL NOT BE LESS THAN FULL WIDTH OF ALL POINTS OF INGRESS OR EGRESS.
4. STABILIZATION FOR OTHER AREAS SHALL HAVE THE SAME AGGREGATE THICKNESS AND WIDTH REQUIREMENTS AS THE STABILIZED CONSTRUCTION EXIT, UNLESS OTHERWISE SHOWN ON THE CONSTRUCTION DRAWINGS.
5. STABILIZED AREA MAY BE WIDENED OR LENGTHENED TO ACCOMMODATE A TRUCK WASHING AREA. AN OUTLET SEDIMENT TRAP MUST BE PROVIDED FOR THE TRUCK WASHING AREA.
6. STABILIZED CONSTRUCTION EXIT MUST BE PROPERLY GRADED OR INCORPORATE DRAINAGE SWALE TO PREVENT RUNOFF FROM LEAVING THE CONSTRUCTION SITE AND SHALL BE MAINTAINED FREE OF SEDIMENT FOR THE DURATION OF THE PROJECT.
7. THE ENTRANCE SHALL BE MAINTAINED IN A CONDITION WHICH WILL PREVENT TRACKING OR FLOWING OF SEDIMENT ONTO PAVED SURFACES. THIS MAY REQUIRE PERIODIC TOP DRESSING WITH ADDITIONAL STONE A CONDITIONS DEMAND. ALL SEDIMENT SPILLED, DROPPED, WASHED OR TRACKED ONTO PAVED SURFACES, MUST BE REMOVED IMMEDIATELY.
8. STABILIZED CONSTRUCTION EXIT SHALL BE USED FOR SUBGRADE OF THE PROPOSED ACCESS DRIVE. CONTRACTOR TO LEVEL STABILIZED ROCK AND PLACE CRUSHED LIMESTONE AS PER DETAIL.

TEMPORARY STABILIZATION

ANY AREA LEFT DISTURBED FOR MORE THAN 21 DAYS SHALL BE TEMPORARILY REVEGETATED WITH SEED AT THE DIRECTION OF THE ENGINEER.

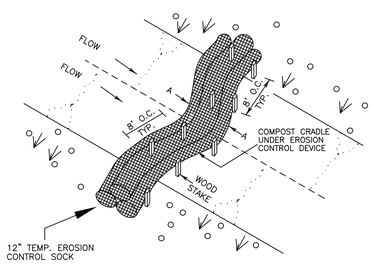

DITCH LINE SEDIMENT TRAP

NTS

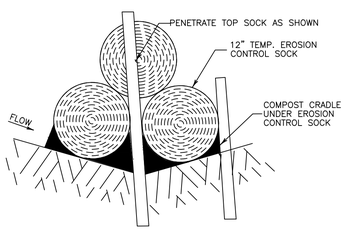

DITCH LINE SEDIMENT TRAP A–A

NTS

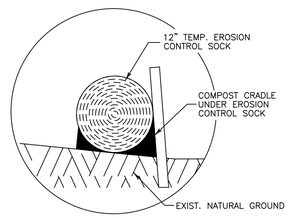

COMPOST CRADLE

NTS

GENERAL NOTES

1. LENGTHS OF EROSION CONTROL SOCKS SHALL BE IN ACCORDANCE WITH MANUFACTURER'S RECOMMENDATIONS AND AS REQUIRED FOR THE PURPOSE INTENDED. MAXIMUM LENGTH OF SOCKS SHALL BE 30' FOR 12" DIAMETER SOCKS.
2. UNLESS OTHERWISE DIRECTED, USE BIODEGRADABLE OR PHOTODEGRADABLE CONTAINMENT MESH ONLY WHERE SOCK WILL REMAIN IN PLACE AS PART OF A VEGETATIVE SYSTEM. FOR TEMPORARY INSTALLATIONS, USE RECYCLABLE CONTAINMENT MESH.
3. STUFF SOCKS WITH SUFFICIENT FILTER MATERIAL TO ACHIEVE DENSITY THAT WILL HOLD SHAPE WITHOUT EXCESSIVE DEFORMATION.
4. STAKES SHALL BE 2" X 2" WOOD 4' LONG, EMBEDDED SUCH THAT 2" PROTRUDES ABOVE SOCK.
5. COMPOST CRADLE MATERIAL IS INCIDENTAL AND WILL NOT BE PAID FOR SEPARATELY.
6. A SEDIMENT TRAP MAY BE USED TO PRECIPITATE SEDIMENT OUT OF RUNOFF DRAINING FROM AN UNSTABILIZED AREA.
7. TRAPS: THE DRAINAGE AREA FOR A SEDIMENT TRAP SHOULD NOT EXCEED 5 ACRES. THE TRAP CAPACITY SHOULD BE 1800 CF/ACRE (0.5" OVER THE DRAINAGE AREA).
8. SEDIMENT TRAPS SHOULD BE PLACED IN THE FOLLOWING LOCATIONS:
   1. IMMEDIATELY PRECEDING DRAIN INLETS.
   2. JUST BEFORE THE DRAINAGE ENTERS A WATER COURSE.
   3. JUST BEFORE THE DRAINAGE LEAVES THE RIGHT OF WAY.
   4. JUST BEFORE THE DRAINAGE LEAVES THE CONSTRUCTION LIMITS WHERE DRAINAGE FLOWS AWAY FROM THE PROJECT.
9. THE TRAP SHOULD BE CLEANED WHEN THE CAPACITY HAS 1 OR THE SEDIMENT HAS ACCUMULATED 2 BEEN REDUCED BY TO A DEPTH OF 1', WHICHEVER IS LESS. CLEANING AND REMOVAL OF ACCUMULATED SEDIMENT DEPOSITS IS INCIDENTAL AND WILL NOT BE PAID FOR SEPARATELY.

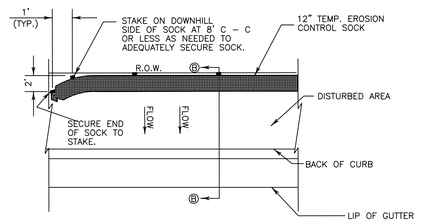

PLAN VIEW

NTS

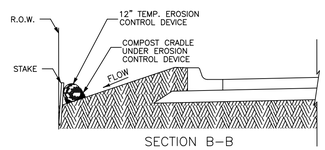

SECTION B–B

RIGHT–OF–WAY SEDIMENT TRAP

NTS

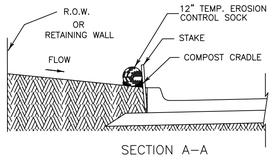

SECTION A–A

BACK OF CURB INLET SEDIMENT TRAP

NTS

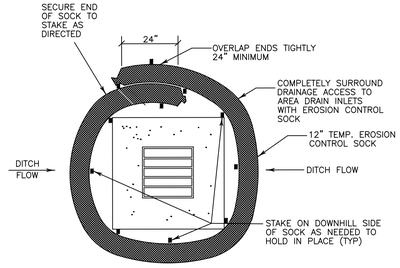

TYPE 'C' INLET SEDIMENT TRAP

NTS

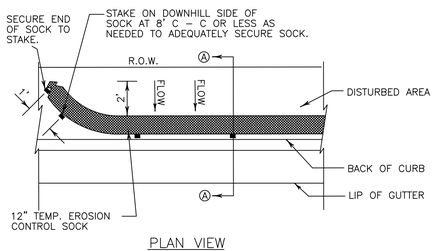

PLAN VIEW

NTS

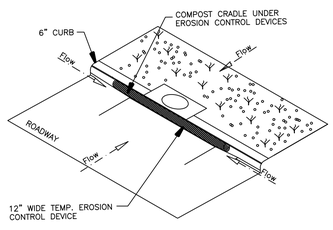

CURB INLET SEDIMENT TRAP

NTS

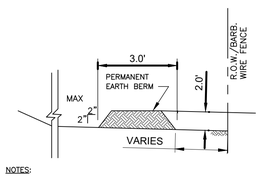

NOTES:

1. CONTRACTOR WILL CLEAN UP IMMEDIATELY ANY MATERIAL TRACKED ON TO PUBLIC STREETS AS A RESULT OF CONSTRUCTION.
2. BERM TO BE KEPT PERMANENTLY.

EARTH BERM DETAIL

NTS

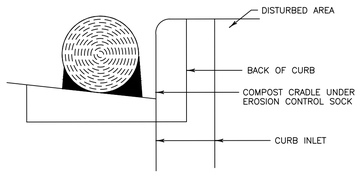

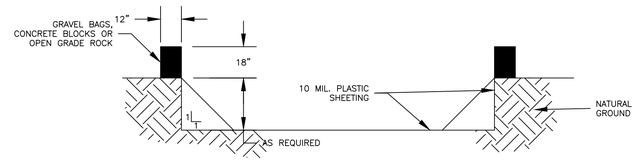

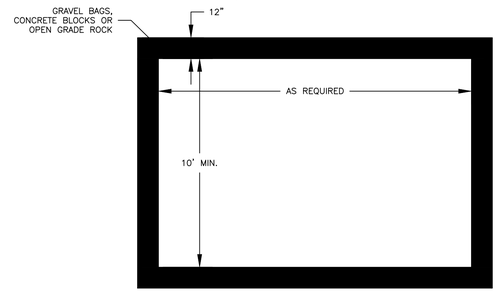

PAINT / CONCRETE WASHOUT PIT

NTS

WASHOUT PIT NOTES

1. THE EXCAVATION FOR THE CONCRETE WASHOUT SHALL BE A MINIMUM OF 10' WIDE AND A SUFFICIENT LENGTH AND DEPTH TO ACCOMMODATE 7 GALLONS OF WASHOUT WATER AND CONCRETE PER TRUCK PER DAY AND/OR 50 GALLONS WATER AND CONCRETE PER PUMP TRUCK PER DAY
2. IN THE EVENT THAT THE CONCRETE TRUCK WASHOUT IS CONSTRUCTED ABOVE GROUND, IT SHALL BE 10 FEET WIDE AND 10 FEET LONG WITH WITH THE SAME REQUIREMENTS FOR CONTAINMENT AS DESCRIBED IN NOTE 1.
3. THE CONTAINMENT AREA SHALL BE LINED WITH 10 MIL. PLASTIC SHEETING WITHOUT HOLES OR TEARS. WHERE THERE ARE SEAMS, THESE SHALL BE SECURED ACCORDING TO MANUFACTURERS' DIRECTIONS.
4. THE BERM CONSISTING OF GRAVEL BAGS, CONCRETE BLOCKS OR OPEN GRADED ROCK SHALL BE NO LESS THAN 18 INCHES HIGH AND NO LESS THAN 12 INCHES WIDE.
5. THE PLASTIC SHEETING SHALL BE OF SUFFICIENT SIZE SO THAT IT WILL OVER LAP THE TOP OF THE CONTAINMENT AREA AND BE WRAPPED AROUND THE GRAVEL BAGS, CONCRETE BLOCKS OR OPEN GRADED ROCK AT LEAST TWO TIMES.
6. THE GRAVEL BAGS, CONCRETE BLOCKS OR OPEN GRADED ROCK SHALL BE PLACED ABUTTING EACH OTHER TO FORM A CONTINUOUS BERM AROUND THE OUTER PERIMETER OF THE CONTAINMENT AREA.
7. THE WASHOUT MATERIAL IN THE CONTAINMENT AREA SHALL NOT EXCEED 50% OF CAPACITY AT ANY ONE TIME.
8. SOLIDS SHALL BE REMOVED FROM CONTAINMENT AREA AND DISPOSED OF PROPERLY. ANY DAMAGE TO THE PLASTIC SHEETING SHALL BE REPAIRED OR SHEETING BE REPLACED BEFORE THE NEXT USE.

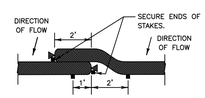

LAP DETAIL

NTS

BROWNSVILLE P.U.B.

WWTP VACTOR TRUCK FACILITY
IMPROVEMENTS

HALFF
1170 PARKSIDE LNE S.ROAD, SUITE B
BROWNSVILLE, TEXAS 78526
TEL (956) 303-7100
TBPELS ENGINEERING FIRM #312

Revision		
No.	Date	Description

STATE OF TEXAS
JOHN W. CLINT
85417
LICENSED
PROFESSIONAL ENGINEER
10/30/2020

Project No.:	37387.001
Issued:	10/30/2020
Drawn By:	JG
Checked By:	JWC/RM
Scale:	AS NOTED

Sheet Title

EROSION CONTROL DETAILS

C1-9

Sheet Number

GENERAL STRUCTURAL NOTES

THESE GENERAL NOTES SHALL APPLY UNLESS OTHERWISE SPECIFICALLY NOTED ON PLANS OR DETAILS.THE CONTRACTOR SHALL VERIFY ALL DIMENSIONS AND SHALL COORDINATE ALL STRUCTURAL PLANS AND DETAILS WITH CIVIL & MECHANICAL DRAWINGS BEFORE STARTING WORK. THE ENGINEER SHALL BE NOTIFIED OF ANY DISCREPANCIES PRIOR TO CONSTRUCTION. THE ENGINEER ASSUMES NO RESPONSIBILITY FOR CONTRACTOR MEANS AND METHODS OF CONSTRUCTION OR SITE SAFETY. DESIGN, CONSTRUCTION, WORKMANSHIP AND MATERIALS SHALL COMPLY WITH THE CONTROLLING PROVISIONS OF THE 2018 EDITION OF THE **INTERNATIONAL BUILDING CODE (IBC)**.

DESIGN CRITERIA

1. BASIS FOR DESIGN AND CODE COMPLIANCE

   A. GOVERNING BUILDING CODE.....IBC 2018 EDITION

2. WIND DESIGN BASED ON:

   A. ASCE 7–16 REQUIREMENTS

   DESIGN WIND SPEED ..... 144 MPH (VASD=112 MPH)
   RISK CATEGORY II
   WIND EXPOSURE CATEGORY C
   INTERNAL PRESSURE COEFFICIENT (GCpi) ..... +/–0.18
   Kzt 1.0
   Kd 0.85

3. THESE BUILDINGS ARE DESIGNED TO MEET ASCE 7–16 WIND PRESSURES. ALL COMPONENTS AND CLADDINGS (E.G. WINDOWS, DOORS, SIDINGS AND ROOF PANELS): MUST MEET MINIMUM WIND CODE REQUIREMENTS. CONTRACTOR MUST SUBMIT COMPONENT AND CLADDING WIND PRESSURE RATINGS AND REQUIRED ATTACHMENT PROCEDURES TO STRUCTURAL ENGINEER FOR REVIEW. IN ADDITION AS ADOPTED BY THE TEXAS DEPARTMENT OF INSURANCE, GLAZED EXTERIOR OPENINGS IN THE LOWER 60 FEET OF THE BUILDING SHALL BE IMPACT RESISTANT MEETING ASTM E 1996 FOR LARGE MISSILES OR PROTECTED WITH AN IMPACT RESISTANT COVERING.

4. SUBMITTAL INFORMATION FOR EXTERIOR COMPONENTS AND CLADDING SHALL INCLUDE A THIRD PARTY TESTING REPORT OF THE SUBMITTED ASSEMBLY.

5. CONTRACTOR SHALL CONTACT ENGINEER TO COORDINATE AND SCHEDULE REQUIRED PERIODIC INSPECTION OF EXTERIOR COMPONENTS AND CLADDING.

FOUNDATION DESIGN CRITERIA

VACTOR TRUCK DISPOSAL AREA FOUNDATION

1. FOUNDATION DESIGN IS IN ACCORDANCE WITH THE INTERNATIONAL BUILDING CODE, AND IS BASED ON THE GEOTECHNICAL REPORT No. 01–20–29123 PREPARED BY MILLENIUM ENGINEERS GROUP, INC., PHARR, TEXAS, DATED MARCH 16, 2020.

   BEARING CAPACITY (GRADE BEAMS) ..... 1.8 KSF

   BEARING CAPACITY (SPREAD FOOTINGS & WIDENED BEAMS) ..... 2.1 KSF

   SUBSURFACE WATER WAS ENCOUNTERED 12 FEET BELOW NATURAL GROUND LEVEL DURING BORING OPERATIONS. (MAY FLUCTUATE WITH SEASON)

2. THE GEOTECHNICAL ENGINEER OF RECORD SHALL BE RETAINED TO PERFORM TESTING AND INSPECTIONS DURING SITE PREPARATION AND PLACEMENT OF BUILDING PAD FILL AS REQUIRED BY SPECIFICATIONS AND GENERAL STRUCTURAL NOTES.

FOUNDATION NOTES

1. REMOVE **AT LEAST 45 INCHES** OF EXISTING BUILDING PAD MATERIAL FROM THE VACTOR TRUCK DISPOSAL FOUNDATION AREA TO A DISTANCE OF 5'–0" OUTSIDE THE FOUNDATION AREA.

2. AFTER BUILDING PAD HAS BEEN REMOVED, THE SUBGRADE SHALL BE PROOF–ROLLED WITH APPROPRIATE CONSTRUCTION EQUIPMENT WEIGHING AT LEAST 20 TONS UNTIL THE GRADE OFFERS A RELATIVELY UNYIELDING SURFACE. SOFT SOIL AND YIELDING AREAS SHALL BE OVER EXCAVATED AND REPLACED WITH SELECT FILL IN ACCORDANCE WITH NOTE 5.

3. SCARIFY, MOISTURE CONDITION, AND COMPACT THE TOP 12" OF THE EXPOSED SUBGRADE TO 98% OF MAXIMUM DENSITY AT –2% OPTIMUM TO +2% OF OPTIMUM MOISTURE CONTENT, IN ACCORDANCE WITH TEST METHOD ASTM D–698. MOISTURE CONTENT SHALL BE AS NOTED IMMEDIATELY PRIOR TO PLACING SELECT FILL.

4. FILL BACK TO REQUIRED GRADE WITH NEW SELECT FILL MATERIAL **MINIMUM OF 42"** OR AS REQUIRED TO PROVIDE THE SPECIFIED FINISH FLOOR ELEVATION AND PROPER SITE DRAINAGE. COMPACTED IN ACCORDANCE WITH THE REQUIREMENTS BELOW. FINISH FLOOR ELEVATIONS SHALL BE VERIFIED WITH THE CIVIL ENGINEER.

5. SELECT FILL SHALL BE COMPACTED IN THE FIELD IN LIFTS NOT TO EXCEED 8" LOOSE MEASURE (6" COMPACTED LIFT) TO A MINIMUM OF 98% OF STANDARD PROCTOR MAXIMUM DRY DENSITY AT –2% TO +2% OF OPTIMUM MOISTURE CONTENT, AS EVALUATED BY ASTM D–698.

6. SELECT FILL SHALL HAVE A PLASTICITY INDEX (PI) OF 10–17% AND LIQUID LIMIT (LL) OF LESS THAN 40%, NO CLAY BALLS LARGER THAN 2" IN DIAMETER.

7. FOUNDATION CONCRETE SHALL NOT BE PLACED ON SELECT FILL SOILS THAT HAVE BEEN DISTURBED BY RAINFALL OR WATER SEEPAGE. IF BEARING SOILS ARE SOFTENED BY WATER INTRUSION, OR BY DESICCATION, THE UNSUITABLE SOILS SHALL BE REMOVED FROM THE FOUNDATION EXCAVATION AND BE REPLACED WITH PROPERLY COMPACTED SELECT FILL PRIOR TO PLACEMENT OF FOUNDATION CONCRETE. ALL SOIL REMOVAL AND REPLACEMENT COSTS, INCLUDING ASSOCIATED COSTS TO REMOVE AND REINSTALL REINFORCEMENT, SHALL BE THE SOLE RESPONSIBILITY OF THE GENERAL CONTRACTOR. DEPTH OF SOIL REMOVAL AND RECOMPACTION REQUIREMENTS SHALL BE COORDINATED WITH THE GEOTECHNICAL ENGINEER.

8. SAMPLES OF SUB GRADE SOIL MATERIAL AND PROPOSED SELECT FILL SHALL BE FURNISHED TO THE TESTING LABORATORY 7 DAYS PRIOR TO INSTALLATION TO PERMIT TIME FOR SPECIFICATION COMPLIANCE INSPECTION AND REVIEW BY THE GEOTECHNICAL ENGINEER.

9. LABORATORY MOISTURE–DENSITY CURVES SHALL BE DEVELOPED FOR SUBGRADE AND FILL. PROCTOR CURVES AND FIELD DENSITY TESTS SHALL BE SUBMITTED TO THE ENGINEER FOR REVIEW. A MINIMUM OF ONE (1) IN PLACE DENSITY TEST PER 1000 SQUARE FEET OF SLAB AREA SHALL BE TAKEN ON EACH LIFT DURING PLACEMENT OF SELECT FILL. DENSITY REPORTS SHALL BE SENT TO ENGINEER WITHIN 3 DAYS AFTER TESTS ARE MADE.

10. SITE SHALL BE GRADED SO THAT WATER DOES NOT POND WITHIN 10 FEET OF THE PERIMETER FOUNDATION BEAM DURING OR AFTER CONSTRUCTION. THE SLOPE OF THE GROUND SURFACE AWAY FROM THE STRUCTURE SHOULD BE A MINIMUM OF FIVE (5%) PERCENT FOR A DISTANCE OF AT LEAST TEN (10') FEET. ELEVATION OF GROUND SURFACE ADJACENT TO THE FOUNDATION SHOULD BE AT LEAST 6 INCHES BELOW FINISH FLOOR.

CONCRETE

1. ALL CONCRETE WORK SHALL CONFORM TO THE AMERICAN CONCRETE INSTITUTE SPECIFICATION, A.C.I. #301 AND BUILDING CODE REQUIREMENTS, A.C.I. #318, LATEST EDITION.

2. ALL DETAILING, FABRICATION AND ERECTION OF REINFORCING BARS, UNLESS OTHERWISE NOTED, MUST FOLLOW THE A.C.I. "MANUAL OF STANDARD PRACTICE FOR DETAILING REINFORCED CONCRETE", A.C.I. #315, LATEST EDITION.

3. CONCRETE SHALL HAVE A MINIMUM COMPRESSION STRENGTH OF 4,000 PSI AT 28 DAYS.

4. A MAXIMUM OF 25% FLYASH MAY BE USED AS A CEMENT SUBSTITUTE AND SHALL CONFORM TO ASTM C618, CLASS C. THE WATER/CEMENT RATIO SHALL NOT EXCEED 0.53 AND SLUMPS SHALL BE 5 INCHES (±1 INCH). AGGREGATE SHALL BE WELL–GRADED, 1" MAXIMUM FOR THE SLAB ON GRADE, 1" MAXIMUM FOR CAST–IN–PLACE BEAMS AND ABOVE GRADE SLABS. COARSE AGGREGATE SHALL MEET ASTM C33, GRADATION #57. A QUALIFIED TESTING LABORATORY SHALL BE RETAINED TO FURNISH MIX DESIGNS FOR ALL CLASSES OF CONCRETE. A SAMPLE OF FOUR CYLINDERS SHALL BE TAKEN NOT LESS THAN ONCE A DAY, NOR LESS THAN ONCE FOR EACH 100 YD3 OF CONCRETE. ONE CYLINDER SHALL BE TESTED AT 7 DAYS AND TWO AT 28 DAYS. THE FOURTH CYLINDER MAY BE DISPOSED OF AFTER 45 DAYS IF NOT USED.

5. ADMIXTURES CONTAINING WATER SOLUBLE CHLORIDE IONS GREATER THAN 0.06% BY WEIGHT OF CEMENT SHALL NOT BE USED.

6. REINFORCING BARS SHALL BE NEW BILLET STEEL CONFORMING TO ASTM A–615, GRADE 60. #3 BARS MAY BE GRADE 40.

CONCRETE CONTINUED:

7. WELDED WIRE FABRIC MATS SHALL BE ASTM A185.

8. STANDARD PROTECTIVE COVER OF REINFORCING BARS UNLESS OTHERWISE NOTED SHALL BE:

   WHERE CAST AGAINST DIRT OR FILL ..... 3 IN.
   EXPOSED TO EARTH OR WEATHER ..... 2 IN.
   SLABS AND WALLS ..... 2 IN.
   OTHER ..... 1–1/2 IN.

9. ALL ACCESSORIES SHALL BE IN ACCORDANCE WITH ACI 315, LATEST EDITION.

10. SLAB MAT TO BE SUPPORTED BY PLASTIC CHAIRS SPACED AT 4 FEET ON CENTER EACH WAY (MAX). BEAM CAGES SUPPORTED BY CHAIRS AT 4 FEET ON CENTER.

11. VERTICAL CONSTRUCTION JOINTS IN FLOOR SHALL BE COORDINATED WITH STRUCTURAL ENGINEER PRIOR TO FORMING SLAB. NO HORIZONTAL JOINTS WILL BE PERMITTED IN SLABS OR BEAMS UNLESS APPROVED BY THE ENGINEER.

12. ALLOW 1.0 TON OF REINFORCING BARS #4 OR LARGER TO BE USED AS DIRECTED IN FIELD FOR SPECIAL CONDITIONS AT A COST OF $2,000 PER TON (LABOR FOR PLACING SAME TO BE INCLUDED). CREDIT OWNER FOR UNUSED MATERIAL & LABOR.

13. PROVIDE 2 TOP & BOTTOM CORNER BARS AT ALL DISCONTINUOUS GRADE BEAMS, FOUNDATION, AND WALL CORNERS. CORNER BARS SHALL BE 6'–0" IN LENGTH (3'–0" LEGS). SIZE OF THE CORNER BARS SHALL MATCH THE SIZE OF THE GRADE BEAM/WALL REINFORCING AS SHOWN BY STRUCTURAL DRAWINGS.

14. MAINTAIN A MINIMUM OF ONE AND ONE–HALF (1–1/2) TIMES THE MAXIMUM COARSE AGGREGATE SIZE BETWEEN ALL REINFORCING BARS (EXCEPT AT LAPS).

15. BARS SCHEDULED OR DETAILED "CONT" SHALL BE LAPPED 48 BAR DIAMETERS (24 INCHES MINIMUM) UNLESS OTHERWISE NOTED.

16. WHERE CONCRETE IS TO HAVE UNEXPOSED SURFACES, THE FORMS MAY BE CONSTRUCTED OF #2 LUMBER OR BETTER. WHERE SURFACES ARE EXPOSED, SUCH AS FOR FINISH PAINTING OR STUCCO DASH, THE FORMS SHALL BE COMMERCIAL STANDARD DOUGLAS FIR, MOISTURE–RESISTANT CONCRETE FORM PLYWOOD; MINIMUM 5–PLY AND AT LEAST 9/16" THICK, OR FORMS LINED WITH COMMERCIAL STANDARD DOUGLAS FIR, CONCRETE FORM EXTERIOR, 3–PLY, NOT LESS THAN 1/4" THICK. WHERE CONCRETE IS EXPOSED, A SMOOTH SURFACE IS REQUIRED, FREE FROM FINS, HONEYCOMB, FORM MARKS OR OTHER DEFECTS.

17. EXPOSED SURFACES OF CONCRETE AT THE PERIMETER OF THE FOUNDATION SHALL BE FORMED WITH 2X10 #2 LUMBER OR BETTER. A SMOOTH SURFACE IS REQUIRED, FREE FROM FINS, HONEYCOMB, FORM MARKS OR OTHER DEFECTS.

18. CONSTRUCT FORMS SO THAT JOINTS ARE LEAKPROOF. MAINTAIN FORMS SUFFICIENTLY RIGID TO PREVENT DEFORMATION UNDER LOAD.

19. CONCRETE MAY BE PLACED WITH CHUTES UP TO 25' MAXIMUM. SLUMP SHALL NOT EXCEED 6" AT TRUCK DISCHARGE POINT.

20. CONCRETE PLACED BY PUMPING SHALL MEET THE FOLLOWING REQUIREMENTS:

    A. COARSE AGGREGATE SHALL BE GRADED FROM A MAXIMUM OF 1" DOWN

    B. MAXIMUM ALLOWABLE INCREASE IN CEMENT FACTOR SHALL BE 1/2 SACK PER CUBIC YARD OVER NORMAL MIX DESIGN.

    C. MAXIMUM WATER CEMENT RATIO SHALL BE 7–1/2 GALLONS PER SACK OF CEMENT. IF MORE WORKABILITY IS REQUIRED, AN ADMIXTURE MAY BE USED.

    D. MAXIMUM WEIGHT RATIO OF FINE AGGREGATES TO COARSE AGGREGATES SHALL NOT EXCEED 2/3.

    E. REFER TO A.C.I. #301, LATEST EDITION, SECTION 800, FOR OTHER PUMPING REQUIREMENTS.

    F. IN NO CASE SHALL CONCRETE BE PUMPED THROUGH AN ALUMINUM TUBE.

    G. SLUMP SHALL NOT EXCEED 6" AT TRUCK DISCHARGE POINT.

21. FLOOR FINISH (TOLERANCES)

    A. STEEL TROWEL FINISH 1/8" IN 10'

    B. FLOAT FINISH 1/4" IN 10'

    C. SCRATCH FINISH 1/2" IN 10'

22. CONCRETE TO BE CURED IN ACCORDANCE WITH ACI RECOMMENDATIONS. PROPOSED METHOD OF CURING TO BE COORDINATED WITH ENGINEER PRIOR TO CONCRETE PLACEMENT.

23. SHOP DRAWINGS SHALL BE PREPARED FOR ALL REINFORCING STEEL AND SUBMITTED FOR REVIEW BY ENGINEER. SUBMITTALS SHALL BE TRANSMITTED AS A SINGLE ELECTRONIC FILE (PDF FORMAT). ENGINEERING DRAWINGS SHALL NOT BE REPRODUCED AND USED AS SHOP DRAWINGS.

24. THE CONTRACTOR SHALL REVIEW AND ANNOTATE SHOP DRAWINGS BEFORE SUBMITTING THEM TO THE ENGINEER FOR REVIEW. THE CONTRACTOR SHALL ALLOW ENGINEER 10 WORKING DAYS FOR REVIEW OF SHOP DRAWINGS.

25. ENGINEER TO BE NOTIFIED 48 HOURS PRIOR TO PLACEMENT OF FOUNDATION AND OF STRUCTURAL CONCRETE TO SCHEDULE REQUIRED OBSERVATIONS.

FASTENERS

1. CAST–IN–PLACE AND POST–INSTALLED ANCHORS SHALL BE PER ANCHOR DIAMETER AND EMBEDMENT DEPTH NOTED ON THE DRAWINGS. POST–INSTALLED ANCHORS SHALL BE UTILIZED ONLY WHERE SPECIFIED. ALL POST INSTALLED ANCHORS SHALL BE STAINLESS STEEL.

2. ALL ANCHORS NOTED BELOW SHALL BE INSTALLED IN ACCORDANCE WITH THE MANUFACTURER'S RECOMMENDATIONS. CONTRACTOR SHALL CONTACT MANUFACTURER'S REPRESENTATIVE FOR THE INITIAL TRAINING AND INSTALLATION OF ANCHORS, AND FOR PRODUCT RELATED QUESTIONS AND AVAILABILITY.

3. SPECIAL INSPECTIONS SHALL BE PROVIDED FOR ALL MECHANICAL AND ADHESIVE ANCHORS PER THE APPLICABLE EVALUATION REPORT NOTED BELOW. SPECIAL INSPECTIONS SHALL BE PERFORMED BY INDEPENDENT TESTING LABORATORY PERFORMING QA/QC SERVICES ON PROJECT.

4. EXPANSION BOLTS (EB) IN CONCRETE/CMU SHALL BE TESTED AND QUALIFIED FOR USE IN ACCORDANCE WITH ACI 355.2 AND ICC–ES AC193. ACCEPTABLE PRODUCTS:

   A. KWIK BOLT III (ICC–ES ESR–2302) BY HILTI (CONCRETE)

   B. KWIK BOLT III (ICC–ES–ESR–1385) BY HILTI (MASONRY)

   C. STRONG–BOLT 2 (ICC–ES ESR–3037) BY SIMPSON STRONG–TIE (CONCRETE)

   D. WEDGE–ALL ANCHOR (ICC–ES ESR–1396) BY SIMPSON STRONG–TIE (MASONRY)

5. HEAVY DUTY SLEEVE ANCHORS IN CONCRETE/CMU SHALL BE TESTED AND QUALIFIED OR USE IN ACCORDANCE WITH ACI 355.2 AND ICC–ES AC193. EXPANSION BOLTS (EB) SHALL NOT BE SUBSTITUTED FOR SLEEVE ANCHORS WITHOUT PRIOR WRITTEN APPROVAL BY STRUCTURAL ENGINEER. ACCEPTABLE PRODUCTS:

   A. HSL–3 (ICC–ES ESR–1545) BY HILTI (CONCRETE)

6. SCREW ANCHORS IN CONCRETE SHALL BE TESTED AND QUALIFIED FOR USE IN ACCORDANCE WITH ACI 355.2 AND ICC–ES AC193. ACCEPTABLE PRODUCTS:

   A. KWIK HUS–EZ (ICC–ES ESR–3027) BY HILTI (CONCRETE)

   B. KWIK HUS–EZ (ICC–ES ESR–3056) BY HILTI (MASONRY)

FASTENERS CONTINUED:

   C. TITEN HD (ICC–ES ESR–2713) BY SIMPSON STRONG–TIE (CONCRETE)

   D. TAPCON ANCHORS (ICC–ES ESR–1671) (MASONRY)

   E. POWERS WEDGE BOLT (ICC–ES ESR–1678) (MASONRY)

7. UNDERCUT ANCHORS IN CONCRETE SHALL BE TESTED AND QUALIFIED FOR USE IN ACCORDANCE WITH ACI 355.2 AND ICC–ES AC193. ACCEPTABLE PRODUCTS:

   A. HDA (ICC–ES ESR–1546) BY HILTI (CONCRETE)

   B. TORQ–CUT (ICC–ES ESR–2705) BY SIMPSON STRONG–TIE (CONCRETE)

8. POWDER ACTUATED FASTENERS IN CONCRETE/CMU SHALL BE TESTED AND QUALIFIED FOR USE IN ACCORDANCE WITH ACI 355.2 AND ICC–ES AC193. ACCEPTABLE PRODUCTS:

   A. X–U (ICC–ES ESR–2269) BY HILTI (CONCRETE/MASONRY)

   B. POWDER ACTUATED FASTENERS (ICC–ES ESR–2138) BY SIMPSON STRONG TIE (CONCRETE/MASONRY)

9. ADHESIVE ANCHORS IN CONCRETE/CMU SHALL BE TESTED AND QUALIFIED FOR USE IN ACCORDANCE WITH ACI 355.4 AND ICC–ES AC308. ACCEPTABLE PRODUCTS:

   A. HIT–RE 500–V3 (ICC–ES ESR–3814) BY HILTI (CONCRETE)

   B. HIT–HY 270 (ICC–ES ESR–4143) BY HILTI (MASONRY)

   C. SET–XP (ICC–ES ESR–2508) BY SIMPSON STRONG–TIE (CONCRETE)

   D. SET–XP (IAPMO–ES 265) BY SIMPSON STRONG–TIE (MASONRY)

10. J–BOLTS SHALL BE FABRICATED FROM ASTM F593 ROD. EXPANSION BOLTS/SLEEVE ANCHORS SHALL NOT BE SUBSTITUTED FOR J–BOLTS WITHOUT PRIOR WRITTEN APPROVAL BY STRUCTURAL ENGINEER.

11. HEADED ANCHOR RODS SHALL BE FABRICATED FROM ASTM F593 MATERIAL, FY=60 KSI

12. SUBSTITUTION REQUESTS FOR PRODUCTS LISTED ABOVE SHALL BE SUBMITTED BY THE CONTRACTOR TO THE STRUCTURAL ENGINEER ALONG WITH CALCULATIONS THAT ARE PREPARED & SEALED BY A REGISTERED PROFESSIONAL ENGINEER. THE CALCULATIONS SHALL DEMONSTRATE THAT THE SUBSTITUTED PRODUCT IS CAPABLE OF ACHIEVING THE PERTINENT EQUIVALENT PERFORMANCE VALUES OF THE SPECIFIED PRODUCT USING THE APPROPRIATE DESIGN PROCEDURE AND/OR STANDARDS. SUBSTITUTED ANCHORS SHALL HAVE A VALID CURRENT EVALUATION (ICC–ES OR IAPMO–ES) REPORT.

13. REFERENCE STRUCTURAL STEEL NOTES FOR BOLTS CONNECTING STRUCTURAL STEEL COMPONENTS.

EXTERIOR COMPONENTS & CLADDINGS

ALL EXTERIOR COMPONENT AND CLADDING SYSTEMS (E.G. WINDOWS, CURTAIN WALLS, STOREFRONTS, DOORS, SIDINGS, METAL WALL AND ROOF PANELS, ROOFING SYSTEMS, SKYLIGHTS) MUST MEET MINIMUM WIND CODE REQUIREMENTS. CONTRACTOR MUST SUBMIT COMPONENT AND CLADDING ASSEMBLY WIND PRESSURE AND IMPACT RESISTANCE TESTING RATINGS AND REQUIRED ATTACHMENT PROCEDURES TO STRUCTURAL ENGINEER FOR REVIEW. ROOF TOP MECHANICAL EQUIPMENT AND THEIR SUPPORT COMPONENTS, AND ANCHORING OF THESE ITEMS TO THE STRUCTURE, SHALL BE DELEGATED DESIGN TO BE PERFORMED BY THE EQUIPMENT'S MANUFACTURER, TO MEET THE WIND PRESSURES CALCULATED PER ASCE 7–16 SECTION 29.4.1, USING THE WIND DESIGN PARAMETERS LISTED ON THE GENERAL STRUCTURAL NOTES DESIGN CRITERIA.

1. TESTED ASSEMBLIES

   A. THE CONTRACTOR SHALL INSTALL PROJECT SPECIFIC ASSEMBLIES THAT HAVE BEEN TESTED AND MEET THE APPLICABLE PERFORMANCE REQUIREMENTS LISTED BELOW. PROJECT ASSEMBLIES SHALL BE INSTALLED IN SAME MANNER AS TESTED ASSEMBLIES INCLUDING SYSTEM COMPONENTS, REINFORCEMENT, GLAZING, HARDWARE, ANCHORS AND FASTENING LOCATIONS, SEALANTS & ALL ACCESSORIES, AS APPLICABLE.

2. ASSEMBLY PERFORMANCE REQUIREMENTS

   A. STRUCTURAL PERFORMANCE: TESTED ASSEMBLY THAT PASSES STRUCTURAL PERFORMANCE REQUIREMENTS WHEN TESTED IN ACCORDANCE WITH THE APPLICABLE PERFORMANCE STANDARD(S) LISTED BELOW, AT A MINIMUM OF THE POSITIVE AND NEGATIVE DESIGN WIND–LOAD PRESSURES INDICATED ON THE STRUCTURAL DRAWINGS. TESTED ASSEMBLY SHALL BE NO SMALLER IN WIDTH AND LENGTH THAN ASSEMBLY INDICATED FOR USE ON THE PROJECT AND SHALL MATCH PROJECT ASSEMBLY INCLUDING ALL COMPONENTS AND SUBSTRATE(S).

   B. WINDBORNE–DEBRIS–IMPACT RESISTANCE: TESTED ASSEMBLY THAT PASSES LARGE–MISSILE IMPACT PROTECTION TESTING REQUIREMENTS ACCORDING TO ASTM E 1996 WHEN TESTED ACCORDING TO ASTM E 1886. TESTED ASSEMBLY SHALL BE NO SMALLER IN WIDTH AND LENGTH THAN ASSEMBLY INDICATED FOR USE ON THE PROJECT AND SHALL MATCH PROJECT ASSEMBLY INCLUDING ALL COMPONENTS AND SUBSTRATE(S).

3. ASSEMBLY PERFORMANCE STANDARDS

   A. ASTM E 330 – STANDARD TEST METHOD FOR STRUCTURAL PERFORMANCE OF EXTERIOR WINDOWS, DOORS, SKYLIGHTS AND CURTAIN WALLS BY UNIFORM STATIC AIR PRESSURE DIFFERENCE

   B. ANSI/DASMA 108–STANDARD METHOD FOR TESTING SECTIONAL GARAGE DOORS AND ROLLING DOORS: DETERMINATION OF STRUCTURAL PERFORMANCE UNDER UNIFORM STATIC AIR PRESSURE DIFFERENCE.

   C. ASTM E 1592 – STANDARD TEST METHOD FOR STRUCTURAL PERFORMANCE OF SHEET METAL ROOF AND SIDING SYSTEMS BY UNIFORM STATIC AIR PRESSURE DIFFERENCE

   D. ASTM E 1886 – STANDARD TEST METHOD FOR PERFORMANCE OF EXTERIOR WINDOWS, CURTAIN WALLS, DOORS, AND STORM SHUTTERS IMPACTED BY MISSILE(S) AND EXPOSED TO CYCLIC PRESSURE DIFFERENTIALS

   E. ASTM E 1996 – STANDARD SPECIFICATION FOR PERFORMANCE OF EXTERIOR WINDOWS, CURTAIN WALLS, DOORS AND IMPACT PROTECTIVE SYSTEMS IMPACTED BY WINDBORNE DEBRIS IN HURRICANES

   F. FM 4450 – APPROVAL STANDARD FOR CLASS 1 INSULATED STEEL DECK ROOFS

   G. FM 4470 – APPROVAL STANDARD FOR SINGLE–PLY, POLYMER–MODIFIED BITUMEN SHEET, BUILT–UP ROOF (BUR) AND LIQUID APPLIED ROOF ASSEMBLIES FOR USE IN CLASS 1 AND NONCOMBUSTIBLE ROOF DECK CONSTRUCTION

   H. FM 4474 – AMERICAN NATIONAL STANDARD FOR EVALUATING THE SIMULATED WIND UPLIFT RESISTANCE OF ROOF ASSEMBLIES USING STATIC POSITIVE AND/OR NEGATIVE DIFFERENTIAL PRESSURES

   I. UL 580 – STANDARD FOR TESTS FOR UPLIFT RESISTANCE OF ROOF ASSEMBLIES

   J. UL 1897 – STANDARD FOR UPLIFT TESTS FOR ROOF COVERING SYSTEMS

EXTERIOR COMPONENTS & CLADDINGS CONTINUED:

4. ASSEMBLY SUBMITTALS

   A. SUBMITTALS SHALL CONSIST OF PROJECT SPECIFIC SHOP DRAWINGS AND ASSEMBLY TEST REPORTS, AS DESCRIBED BELOW. SUBMITTALS SHALL BE COMPLETE, CLEAR AND LEGIBLE; INCOMPLETE SUBMITTALS WILL BE REJECTED.

   B. SHOP DRAWINGS SHALL INCLUDE THE FOLLOWING ITEMS:

      1) SYSTEM DESCRIPTION INCLUDING MANUFACTURER'S NAME AND SPECIFIC PRODUCT MODEL NUMBER, NAME OR DESIGNATION.
      2) MANUFACTURER'S PRODUCT DATA/TECHNICAL INFORMATION AND DETAILS.
      3) SYSTEM LAYOUT PLANS, ELEVATIONS, CROSS–SECTIONS AND DETAILS AS APPLICABLE TO THE PROJECT.
      4) DESCRIPTION OF SYSTEM'S ASSEMBLY COMPONENTS (E.G. ROOF LAYERS, FRAME MEMBERS, REINFORCEMENT, DOOR TYPE, GLAZING, HARDWARE, ANCHORS AND FASTENING LOCATIONS, SEALANTS, ACCESSORIES). ALL COMPONENTS SHALL MATCH THOSE SPECIFIED ON ASSEMBLY TEST REPORTS.
      5) SHOP DRAWINGS SHALL INDICATE THE SYSTEM ATTACHMENT METHOD INCLUDING ANCHOR TYPE AND FASTENER LOCATIONS FOR EACH DIFFERENT TYPE OF SUBSTRATE. SYSTEM ATTACHMENT SHALL BE PER ASSEMBLY TEST REPORTS.
      6) ASSEMBLY TEST REPORTS OFTEN PROVIDE OPTIONS FOR MATERIALS AND FASTENING METHODS. SHOP DRAWINGS SHALL BE SPECIFIC TO THE MATERIAL OR METHOD THAT THE CONTRACTOR IS PROPOSING TO INSTALL ON THE PROJECT.
      7) CROSS–REFERENCING BETWEEN THE SHOP DRAWINGS AND THE ASSEMBLY TEST REPORTS IS ENCOURAGED, BUT THE SHOP DRAWINGS SHALL BE DETAILED ENOUGH TO STAND INDEPENDENT OF THE TEST REPORTS.

   C. ASSEMBLY TEST REPORTS SHALL INCLUDE THE FOLLOWING ITEMS:

      1) PERFORMANCE RATINGS BASED ON EVALUATION OF COMPREHENSIVE TESTING IN ACCORDANCE WITH THE APPLICABLE PERFORMANCE STANDARD(S) LISTED ABOVE.
      2) TESTING AND DEVELOPMENT OF REPORTS SHALL BE PERFORMED BY A QUALIFIED THIRD–PARTY TESTING AGENCY.
      3) TEST REPORTS SHALL BE SEALED BY THE QUALIFIED PROFESSIONAL ENGINEER RESPONSIBLE FOR THEIR PREPARATION.
      4) TEST REPORTS SHALL BE RECENT TO INCLUDE THE MOST CURRENT SYSTEM MANUFACTURER'S COMPONENTS AND AVAILABLE FASTENERS AND ACCESSORIES. EXPIRED TEST REPORTS SHALL BE REJECTED.
      5) TEST REPORTS SHALL BE SUBMITTED FOR EACH DIFFERENT TYPE OF ASSEMBLY ON THE PROJECT INCLUDING VARIATIONS OF SYSTEM COMPONENTS AND SUBSTRATES.

GREEN, RUBIANO & ASSOCIATES
CONSULTING STRUCTURAL ENGINEERS
1220 WEST HARRISON
HARLINGEN, TEXAS 78550
PH:(956)428–4461 FAX:(956)428–0287
FIRM REGISTRATION #F–4145

SEAL

STATE OF TEXAS
ROLANDO R. RUBIANO
86360
LICENSED
PROFESSIONAL ENGINEER
10·30·2020

PROJECT

ROBINDALE WWTP VACTOR DISPOSAL IMPROVEMENTS

BROWNSVILLE, TEXAS

CLIENT

BROWSVILLE PUBLIC UTILITIES BOARD

BROWNSVILLE, TEXAS

MARK	DATE	DESCRIPTION

PROJECT NO.	1053–08
DATE	10–30–20
DRAWN BY	JA
CHECKED BY	BD
SCALE	AS SHOWN

SHEET TITLE

GENERAL STRUCTURAL NOTES

SHEET NO.

S1.1

GENERAL STRUCTURAL NOTES

SPECIAL INSPECTIONS

SPECIAL INSPECTIONS INDEPENDENT OF THE CONTRACTOR OR THE ENGINEER, SHALL BE PROVIDED BY A SPECIAL INSPECTOR EMPLOYED BY THE OWNER ACCORDING TO CHAPTER 17 OF THE IBC 2018. THE SPECIAL INSPECTOR SHALL OBSERVE THE WORK FOR CONFORMANCE WITH THE CONTRACT DOCUMENTS. THE SPECIAL INSPECTOR SHALL SEND WRITTEN REPORTS TO THE OWNER, THE ENGINEER AND THE CONTRACTOR. THE REPORTS SHALL INDICATE IF WORK INSPECTED WAS DONE IN CONFORMANCE WITH THE CONTRACT DOCUMENTS. ALL DISCREPANCIES SHALL BE BROUGHT TO THE IMMEDIATE ATTENTION OF THE CONTRACTOR FOR CORRECTION. IF THE DISCREPANCIES ARE NOT CORRECTED, THE SPECIAL INSPECTOR SHALL BRING THE DISCREPANCIES TO THE ATTENTION OF THE REGISTERED DESIGN PROFESSIONAL IN RESPONSIBLE CHARGE PRIOR TO THE COMPLETION OF THAT PHASE OF THE WORK. THE SPECIAL INSPECTOR SHALL SUBMIT A FINAL SIGNED REPORT STATING THAT THE SPECIAL INSPECTION WORK WAS, TO THE BEST OF THEIR KNOWLEDGE, IN OR NOT IN CONFORMANCE WITH THE DRAWINGS, SPECIFICATIONS AND APPLICABLE WORKMANSHIP PROVISIONS OF THE IBC 2018.

CONTINUOUS OR PERIODIC SPECIAL INSPECTION IS REQUIRED FOR THE FOLLOWING WORK:

REQUIRED VERIFICATION AND INSPECTION OF SOILS

VERIFICATION AND INSPECTION TASK	CONTINUOUS DURING TASK LISTED	PERIODICALLY DURING TASK LISTED
VERIFY EXCAVATIONS ARE EXTENDED TO PROPER DEPTH AND HAVE REACHED PROPER MATERIAL		X
PERFORM CLASSIFICATION AND TESTING OF SELECT FILL MATERIALS		X
PRIOR TO PLACEMENT OF SELECT FILL, OBSERVE SUBGRADE AND VERIFY THAT SITE HAS BEEN PREPARED PROPERLY		X
VERIFY USE OF PROPER MATERIALS, DENSITIES AND LIFT THICKNESSES DURING PLACEMENT AND COMPACTION OF SELECT FILL	X	

REQUIRED VERIFICATION AND INSPECTION OF CONCRETE CONSTRUCTION

VERIFICATION AND INSPECTION	CONTINUOUS	PERIODIC
INSPECTION OF REINFORCING STEEL, INCLUDING PRESTRESSING TENDONS, AND PLACEMENT		X
INSPECT BOLTS TO BE INSTALLED IN CONCRETE PRIOR TO AND DURING PLACEMENT OF CONCRETE	X	
VERIFY USE OF REQUIRED DESIGN MIX		X
PERFORM SLUMP AND AIR CONTENT TEST, AND DETERMINE THE TEMPERATURE OF THE CONCRETE AT THE TIME OF SAMPLING FRESH CONCRETE FOR MAKING SPECIMENS FOR STRENGTH TESTS PER ACI 318	X	
INSPECTION OF CONCRETE AND SHOTCRETE PLACEMENT FOR PROPER APPLICATION TECHNIQUES	X	
INSPECTION FOR MAINTENANCE OF SPECIFIED CURING TEMPERATURE AND TECHNIQUES		X
INSPECTION OF PRESTRESSED CONCRETE APPLICATION OF PRESTRESSING FORCES	X	
VERIFICATION OF IN-SITU CONCRETE STRENGTH, PRIOR TO STRESSING OF TENDONS IN POST-TENSIONED CONCRETE AND PRIOR TO REMOVAL OF SHORES AND FORMS FROM BEAMS AND STRUCTURAL SLABS		X
ERECTION OF PRECAST CONCRETE MEMBERS		X
INSPECT FORMWORK FOR SHAPE, LOCATION AND DIMENSIONS OF THE CONCRETE MEMBER BEING FORMED		X

REQUIRED VERIFICATION AND INSPECTION OF ANCHORS

VERIFICATION AND INSPECTION	CONTINUOUS	PERIODIC
CAST-IN-PLACE, POST-INSTALLED, MECHANICAL AND EPOXY SET ANCHORS: AS APPLICABLE, THE INSPECTION PROGRAM SHALL VERIFY THE ANCHOR TYPE, EMBEDMENT, TIGHTENING TORQUE, DIMENSIONS, HOLE DEPTH & DIAMETER AND CLEANOUT, EPOXY MIXING AND PLACEMENT PROCEDURES IN ACCORDANCE WITH THE CONTRACT DOCUMENTS AND THE CURRENT ICC-ES EVALUATION REPORT	FREQUENCY OF INSPECTION SHALL BE IN ACCORDANCE WITH THE CURRENT ICC-ES EVALUATION REPORT, OR PER THE SPECIAL INSPECTION REQUIREMENTS OF THE ANCHOR SUBSTRATE, WHICHEVER IS MORE STRINGENT	

GREEN, RUBIANO & ASSOCIATES
CONSULTING STRUCTURAL ENGINEERS
1220 WEST HARRISON
HARLINGEN, TEXAS 78550
PH: (956)428-4461 FAX: (956)428-0287
FIRM REGISTRATION #F-4145

SEAL

STATE OF TEXAS
ROLANDO R. RUBIANO
86360
LICENSED
PROFESSIONAL ENGINEER
10-30-2020

PROJECT

ROBINDALE WWTP
VACTOR DISPOSAL
IMPROVEMENTS

BROWNSVILLE,
TEXAS

CLIENT

BROWSVILLE
PUBLIC UTILITIES
BOARD

BROWNSVILLE,
TEXAS

MARK	DATE	DESCRIPTION

PROJECT NO.	1053-08
DATE	10-30-20
DRAWN BY	JA
CHECKED BY	BD
SCALE	AS SHOWN

SHEET TITLE

GENERAL
STRUCTURAL
NOTES

SHEET NO.

S1.2

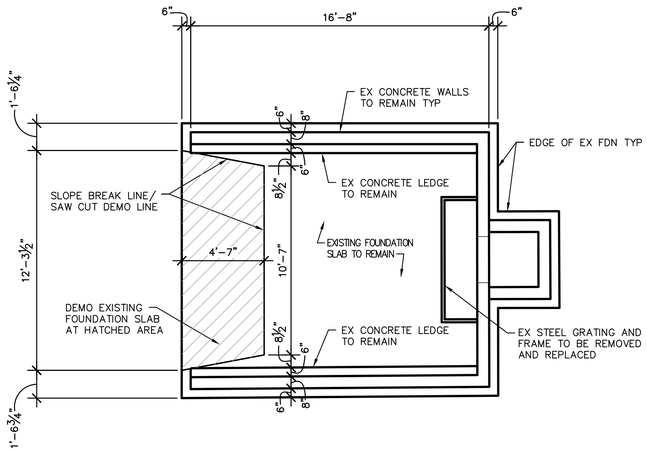

CONTRACTOR SHALL FIELD VERIFY ALL DIMENSIONS & EXISTING CONDITIONS IN THE FIELD. CONTACT ENGINEER IF CONDITIONS VARY FROM THOSE SHOWN ON THE DRAWINGS.

1 EXISTING VACTOR TRUCK DISPOSAL AREA FOUNDATION DEMOLITION PLAN

1/4" = 1'-0" ROBINDALE WWTP

N PLAN NORTH

NOTES:

1. EXISTING VACTOR TRUCK DISPOSAL AREA FOUNDATION PLAN ARE APPROXIMATE AND ARE BASED ON FINAL FOR CONSTRUCTION SEALED DRAWINGS FOR THE ROBINDALE WASTEWATER TREATMENT PLANT RENOVATION AND EXPANSION DESIGN-BUILD DATED JULY 25, 2012. REFERENCE DRAWING 59-S-2011 (SHEET 102), 59-S-3104 (SHEET 112), 59-S-3106 (SHEET 114) FOR ADDITIONAL INFORMATION.
2. CONTRACTOR SHALL FIELD VERIFY EXISTING DIMENSIONS AND ELEVATIONS AND MAKE DESIGN TEAM AWARE IF THEY DIFFER IN THE FIELD. THE CONTRACTOR SHALL INFORM THE DESIGN TEAM OF THE DISCREPANCY AND AWAIT FURTHER INSTRUCTIONS PRIOR TO PROCEEDING.
3. CONTRACTOR SHALL SAFEGUARD ALL PARTS OF EXISTING SCOPE TO REMAIN THAT ARE NOT PART OF THE DEMOLITION SCOPE.
4. CONTRACTOR SHALL BECOME FAMILIARIZED WITH THE EXISTING STRUCTURE AND THE PROPOSED RENOVATIONS AND TAKE NECESSARY ACTIONS TO EXECUTE THE RENOVATIONS.
5. ▨ INDICATES THE AREA WHERE THE EXISTING FOUNDATION SLAB WILL BE SAWCUT AND REMOVED TO ALLOW FOR THE INSTALLATION OF A NEW FOUNDATIONS SLAB AT A REVISED SLOPE. CONTRACTOR TO COORDINATE SLOPE AND ELEVATIONS WITH CIVIL.

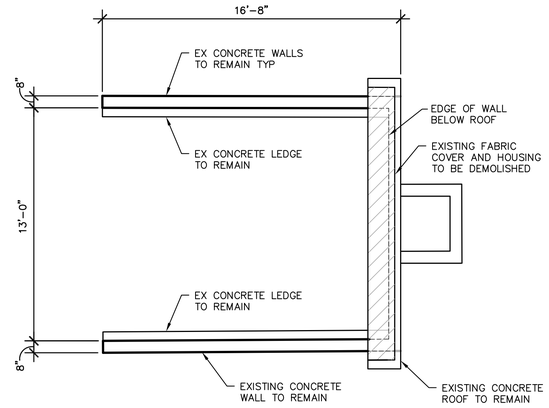

CONTRACTOR SHALL FIELD VERIFY ALL DIMENSIONS & EXISTING CONDITIONS IN THE FIELD. CONTACT ENGINEER IF CONDITIONS VARY FROM THOSE SHOWN ON THE DRAWINGS.

2 EXISTING VACTOR TRUCK DISPOSAL AREA ROOF DEMOLITION PLAN

1/4" = 1'-0" ROBINDALE WWTP

N PLAN NORTH

NOTES:

1. EXISTING VACTOR TRUCK DISPOSAL AREA ROOF PLAN ARE APPROXIMATE AND ARE BASED ON FINAL FOR CONSTRUCTION SEALED DRAWINGS FOR THE ROBINDALE WASTEWATER TREATMENT PLANT RENOVATION AND EXPANSION DESIGN-BUILD DATED JULY 25, 2012. REFERENCE DRAWING 59-S-2011 (SHEET 102), 59-S-3104 (SHEET 112), 59-S-3106 (SHEET 114) FOR ADDITIONAL INFORMATION.
2. CONTRACTOR SHALL FIELD VERIFY EXISTING DIMENSIONS AND ELEVATIONS AND MAKE DESIGN TEAM AWARE IF THEY DIFFER IN THE FIELD. THE CONTRACTOR SHALL INFORM THE DESIGN TEAM OF THE DISCREPANCY AND AWAIT FURTHER INSTRUCTIONS PRIOR TO PROCEEDING.
3. CONTRACTOR SHALL SAFEGUARD ALL PARTS OF EXISTING SCOPE TO REMAIN THAT ARE NOT PART OF DEMOLITION SCOPE.
4. CONTRACTOR SHALL BECOME FAMILIARIZED WITH THE EXISTING STRUCTURE AND THE PROPOSED RENOVATIONS AND TAKE NECESSARY ACTIONS TO EXECUTE THE RENOVATIONS.
5. ▨ INDICATES THE AREA WHERE THE EXISTING FABRIC COVER AND FABRIC COVER HOUSING WILL BE DEMOLISHED AND REMOVED FROM THE EXISTING ROOF.

GREEN, RUBIANO & ASSOCIATES
CONSULTING STRUCTURAL ENGINEERS
1220 WEST HARRISON
HARLINGEN, TEXAS 78550
PH: (956)428-4461 FAX: (956)428-0287
FIRM REGISTRATION #F-4145

SEAL

STATE OF TEXAS
ROLANDO R. RUBIANO
86360
LICENSED
PROFESSIONAL ENGINEER
10-30-2020

PROJECT

ROBINDALE WWTP VACTOR DISPOSAL IMPROVEMENTS

BROWNSVILLE, TEXAS

CLIENT

BROWSVILLE PUBLIC UTILITIES BOARD

BROWNSVILLE, TEXAS

MARK	DATE	DESCRIPTION

PROJECT NO.	1053-08
DATE	10-30-20
DRAWN BY	JA
CHECKED BY	BD
SCALE	AS SHOWN

SHEET TITLE

VACTOR TRUCK FDN AND ROOF DEMOLITION PLANS

SHEET NO.

D-S2.1

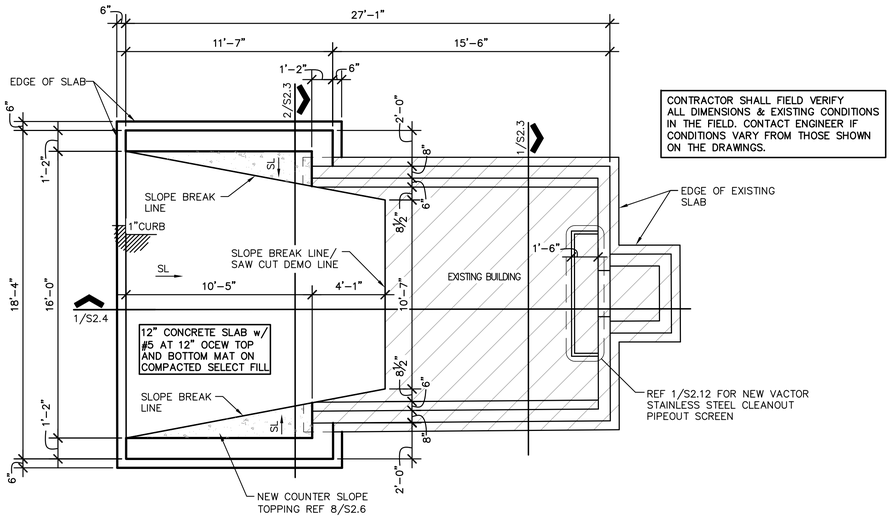

1 EXISTING VACTOR TRUCK DISPOSAL AREA FOUNDATION MODIFICATION PLAN

1/4" = 1'-0" ROBINDALE WWTP

N PLAN NORTH

NOTES:

1. PLAN DIMENSIONS GENERALLY DENOTE WALL/BEAM CENTERLINE AND OUTSIDE FACE OF CONCRETE
2. REFERENCE SHEETS S2.8 AND S2.9 FOR EXTERIOR ELEVATIONS.
3. ALL CONDUIT GREATER THAN 1.1/2" IN DIAMETER (O.D.) SHALL BE LOCATED TO PROVIDE 1.1/2" CLEAR DISTANCE BETWEEN REBAR AND CONDUIT.
4. MAINTAIN 2" MINIMUM CLEAR DISTANCE BETWEEN ALL CONDUIT.
5. PLUMBING LINES SHALL NOT BE PLACED AT THE BOTTOM OF SLAB/MAT/FOOTING EXCAVATIONS. IF NEEDED, MAT/FOOTINGS SHALL BE DEEPENED AND BENT BARS PROVIDED IF LOCATION OF PIPING LINES REQUIRES CUTTING BOTTOM BARS. REFERENCE DETAIL 9/S2.6
6. PLUMBING LINES PASSING THROUGH SLAB/MAT/FOOTING/WALL SHALL BE SLEEVED.
7. REFERENCE DETAIL 8/S2.7 FOR TYPICAL CONSTRUCTION JOINT REQUIREMENTS.
8. REFERENCE DETAIL 6/S2.7 FOR TYPICAL ADDITIONAL REINFORCEMENT REQUIREMENTS AT PIPE PENETRATIONS THROUGH SLAB/MAT/FOOTING/WALL.
9. REFERENCE NOTE 15 OF CONCRETE NOTES ON GENERAL STRUCTURAL NOTE SHEET S1.1 FOR REINFORCEMENT LAP REQUIREMENTS.
10. CONTRACTOR REFER TO CIVIL DRAWINGS FOR BUILDING ORIENTATION AND LOCATION.
11. REFERENCE DETAIL 7/S2.6 FOR TYPICAL HYDROPHILIC WATER STOP AND CONTINUOUS GROOVE GROUTING PROCEDURE DETAIL.
12. [ ] INDICATES AREAS THAT WILL BE TOPPED TO PROVIDE A COUNTER SLOPE. REFERENCE DETAIL 8/S2.6 FOR COUNTER SLOPE SLAB TOPPING WORK SEQUENCE DETAIL.
13. REFER TO CIVIL DRAWINGS BUILDING ELEVATIONS AND FOUNDATION SLOPES.

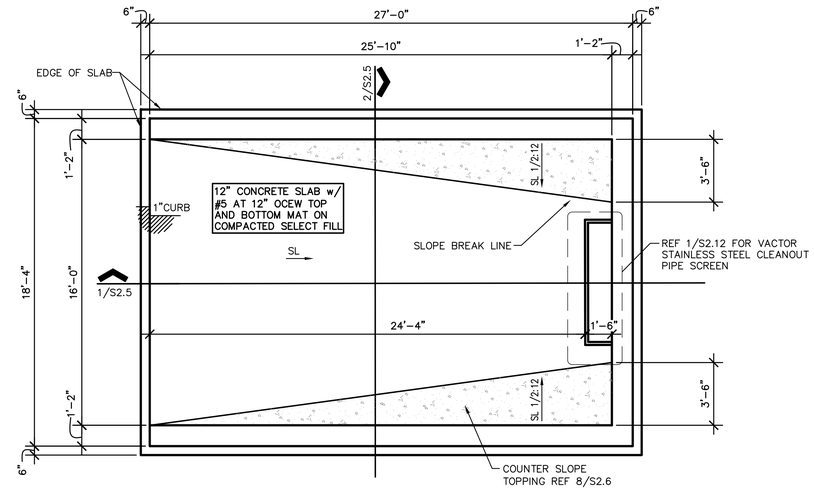

2 NEW VACTOR TRUCKS DISPOSAL AREA FOUNDATION PLAN

1/4" = 1'-0" ROBINDALE WWTP

N PLAN NORTH

NOTES:

1. PLAN DIMENSIONS GENERALLY DENOTE WALL/BEAM CENTERLINE AND OUTSIDE FACE OF CONCRETE
2. REFERENCE SHEETS S2.10 AND S2.11 FOR EXTERIOR ELEVATIONS.
3. ALL CONDUIT GREATER THAN 1.1/2" IN DIAMETER (O.D.) SHALL BE LOCATED TO PROVIDE 1.1/2" CLEAR DISTANCE BETWEEN REBAR AND CONDUIT.
4. MAINTAIN 2" MINIMUM CLEAR DISTANCE BETWEEN ALL CONDUIT.
5. PLUMBING LINES SHALL NOT BE PLACED AT THE BOTTOM OF SLAB/MAT/FOOTING EXCAVATIONS. IF NEEDED, MAT/FOOTINGS SHALL BE DEEPENED AND BENT BARS PROVIDED IF LOCATION OF PIPING LINES REQUIRES CUTTING BOTTOM BARS. REFERENCE DETAIL 9/S2.6
6. PLUMBING LINES PASSING THROUGH SLAB/MAT/FOOTING/WALL SHALL BE SLEEVED.
7. REFERENCE DETAIL 8/S2.7 FOR TYPICAL CONSTRUCTION JOINT REQUIREMENTS.
8. REFERENCE DETAIL 6/S2.7 FOR TYPICAL ADDITIONAL REINFORCEMENT REQUIREMENTS AT PIPE PENETRATIONS THROUGH SLAB/MAT/FOOTING/WALL.
9. REFERENCE NOTE 15 OF CONCRETE NOTES ON GENERAL STRUCTURAL NOTE SHEET S1.1 FOR REINFORCEMENT LAP REQUIREMENTS.
10. CONTRACTOR REFER TO CIVIL DRAWINGS FOR BUILDING ORIENTATION AND LOCATION.
11. REFERENCE DETAIL 7/S2.6 FOR TYPICAL HYDROPHILIC WATER STOP AND CONTINUOUS GROOVE GROUTING PROCEDURE DETAIL.
12. [ ] INDICATES AREAS THAT WILL BE TOPPED TO PROVIDE A COUNTER SLOPE. REFERENCE DETAIL 8/S2.6 FOR COUNTER SLOPE SLAB TOPPING WORK SEQUENCE DETAIL.
13. REFER TO CIVIL DRAWINGS BUILDING ELEVATIONS AND FOUNDATION SLOPES.

GREEN, RUBIANO & ASSOCIATES
CONSULTING STRUCTURAL ENGINEERS
1220 WEST HARRISON
HARLINGEN, TEXAS 78550
PH: (956)428-4461 FAX: (956)428-0287
FIRM REGISTRATION #F-4145

SEAL

STATE OF TEXAS
ROLANDO R. RUBIANO
86369
LICENSED
PROFESSIONAL ENGINEER
10-30-2020

PROJECT

ROBINDALE WWTP
VACTOR DISPOSAL
IMPROVEMENTS

BROWNSVILLE,
TEXAS

CLIENT

BROWSVILLE
PUBLIC UTILITIES
BOARD

BROWNSVILLE,
TEXAS

MARK	DATE	DESCRIPTION

PROJECT NO.	1053-08
DATE	10-30-20
DRAWN BY	JA
CHECKED BY	BD
SCALE	AS SHOWN

SHEET TITLE

VACTOR TRUCK
FOUNDATION
PLANS

SHEET NO.

S2.1

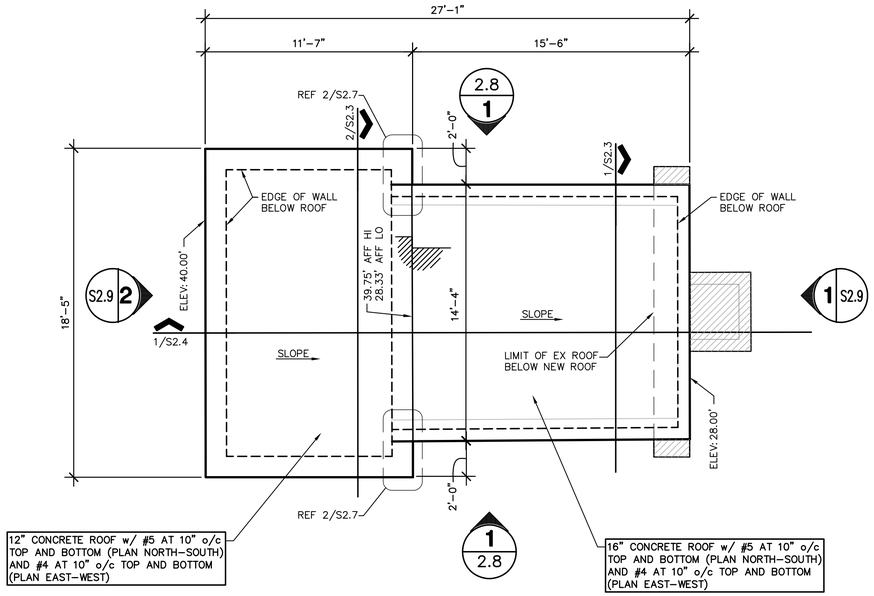

1 EXISTING VACTOR TRUCK DISPOSAL AREA ROOF MODIFICATION PLAN

1/4" = 1'-0" ROBINDALE WWTP

N
PLAN NORTH

NOTES:

1. CONTRACTOR REFER TO CIVIL DRAWINGS FOR BUILDING ORIENTATION AND LOCATION.
2. PLAN DIMENSIONS GENERALLY DENOTE OUTSIDE FACE OF CONCRETE WALLS.
3. REFERENCE 1/S2.1 FOR EXISTING VACTOR TRUCK DISPOSAL AREA FOUNDATION MODIFICATION PLAN.
4. REFERENCE SHEET S2.8 AND S2.9 FOR EXTERIOR ELEVATION.
5. PIPING LINES PASSING THROUGH WALLS SHALL BE SLEEVED.
6. REFERENCE DETAIL 6/S2.7 FOR TYPICAL ADDITIONAL REINFORCEMENT REQUIREMENTS AT PIPE PENETRATIONS THROUGH WALLS.
7. REFERENCE DETAIL 8/S2.7 FOR TYPICAL CONSTRUCTION JOINT REQUIREMENTS.
8. REFERENCE NOTE 15 OF CONCRETE NOTES ON GENERAL STRUCTURAL NOTE SHEET S1.1 FOR REINFORCEMENT LAP REQUIREMENTS.
9. REFER TO CIVIL DRAWINGS BUILDING ELEVATIONS AND ROOF SLOPES.

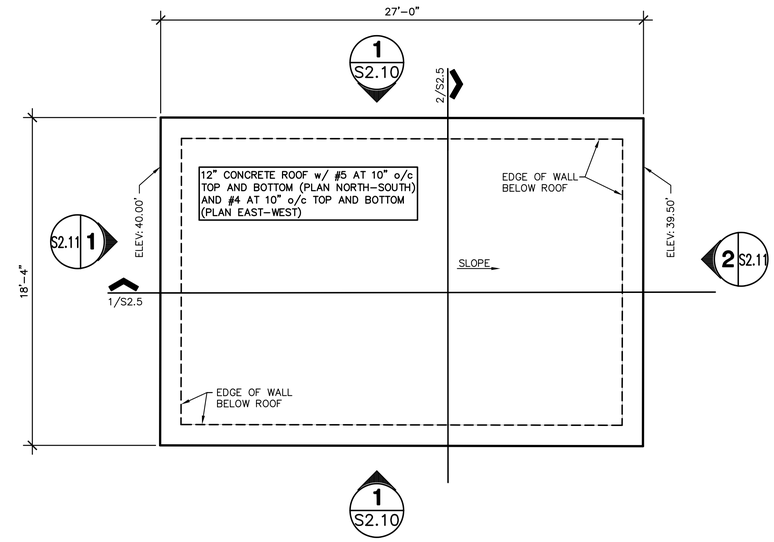

2 NEW VACTOR TRUCK DISPOSAL AREA ROOF PLAN

1/4" = 1'-0" ROBINDALE WWTP

N
PLAN NORTH

NOTES:

1. CONTRACTOR REFER TO CIVIL DRAWINGS FOR BUILDING ORIENTATION AND LOCATION.
2. PLAN DIMENSIONS GENERALLY DENOTE OUTSIDE FACE OF CONCRETE WALLS.
3. REFERENCE 2/S2.1 FOR NEW VACTOR TRUCK DISPOSAL AREA FOUNDATION PLAN.
4. REFERENCE SHEET S2.10 AND S2.11 FOR EXTERIOR ELEVATION.
5. PIPING LINES PASSING THROUGH WALLS SHALL BE SLEEVED.
6. REFERENCE DETAIL 6/S2.7 FOR TYPICAL ADDITIONAL REINFORCEMENT REQUIREMENTS AT PIPE PENETRATIONS THROUGH WALLS.
7. REFERENCE DETAIL 8/S2.7 FOR TYPICAL CONSTRUCTION JOINT REQUIREMENTS.
8. REFERENCE NOTE 15 OF CONCRETE NOTES ON GENERAL STRUCTURAL NOTE SHEET S1.1 FOR REINFORCEMENT LAP REQUIREMENTS.
9. REFER TO CIVIL DRAWINGS BUILDING ELEVATIONS AND ROOF SLOPES.

GREEN, RUBIANO & ASSOCIATES
CONSULTING STRUCTURAL ENGINEERS
1220 WEST HARRISON
HARLINGEN, TEXAS 78550
PH: (956)428-4461 FAX: (956)428-0287
FIRM REGISTRATION #F-4145

SEAL

STATE OF TEXAS
ROLANDO R. RUBIANO
86360
LICENSED
PROFESSIONAL ENGINEER
10-30-2020

PROJECT

ROBINDALE WWTP
VACTOR DISPOSAL
IMPROVEMENTS

BROWNSVILLE,
TEXAS

CLIENT

BROWSVILLE
PUBLIC UTILITIES
BOARD

BROWNSVILLE,
TEXAS

MARK	DATE	DESCRIPTION

PROJECT NO.	1053-08
DATE	10-30-20
DRAWN BY	JA
CHECKED BY	BD
SCALE	AS SHOWN

SHEET TITLE

VACTOR TRUCK
ROOF PLANS

SHEET NO.

S2.2

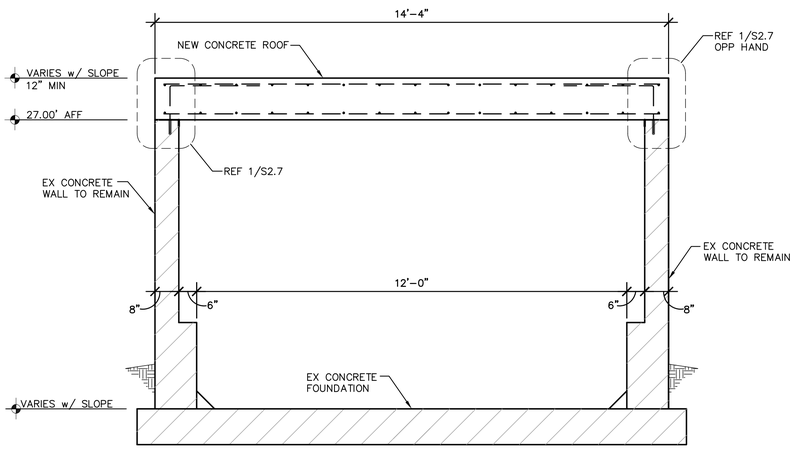

1 EXISTING VACTOR TRUCK DISPOSAL AREA CROSS SECTION

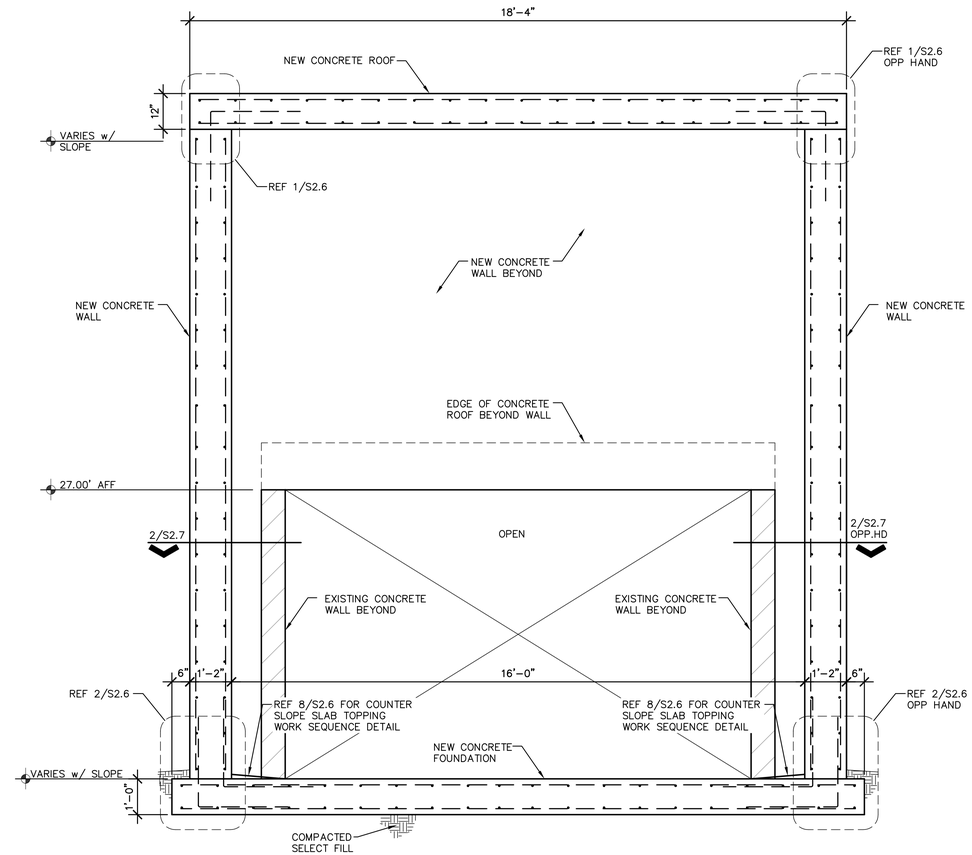

2 EXISTING VACTOR TRUCK DISPOSAL AREA CROSS SECTION

GREEN, RUBIANO & ASSOCIATES
CONSULTING STRUCTURAL ENGINEERS
1220 WEST HARRISON
HARLINGEN, TEXAS 78550
PH: (956)428-4461 FAX: (956)428-0287
FIRM REGISTRATION #F-4145

SEAL

STATE OF TEXAS
ROLANDO R. RUBIANO
86360
LICENSED
PROFESSIONAL ENGINEER
10-30-2020

PROJECT

ROBINDALE WWTP VACTOR DISPOSAL IMPROVEMENTS

BROWNSVILLE, TEXAS

CLIENT

BROWSVILLE PUBLIC UTILITIES BOARD

BROWNSVILLE, TEXAS

MARK	DATE	DESCRIPTION

PROJECT NO.	1053-08
DATE	10-30-20
DRAWN BY	JA
CHECKED BY	BD
SCALE	AS SHOWN

SHEET TITLE

STRUCTURAL CROSS SECTIONS

SHEET NO.

S2.3

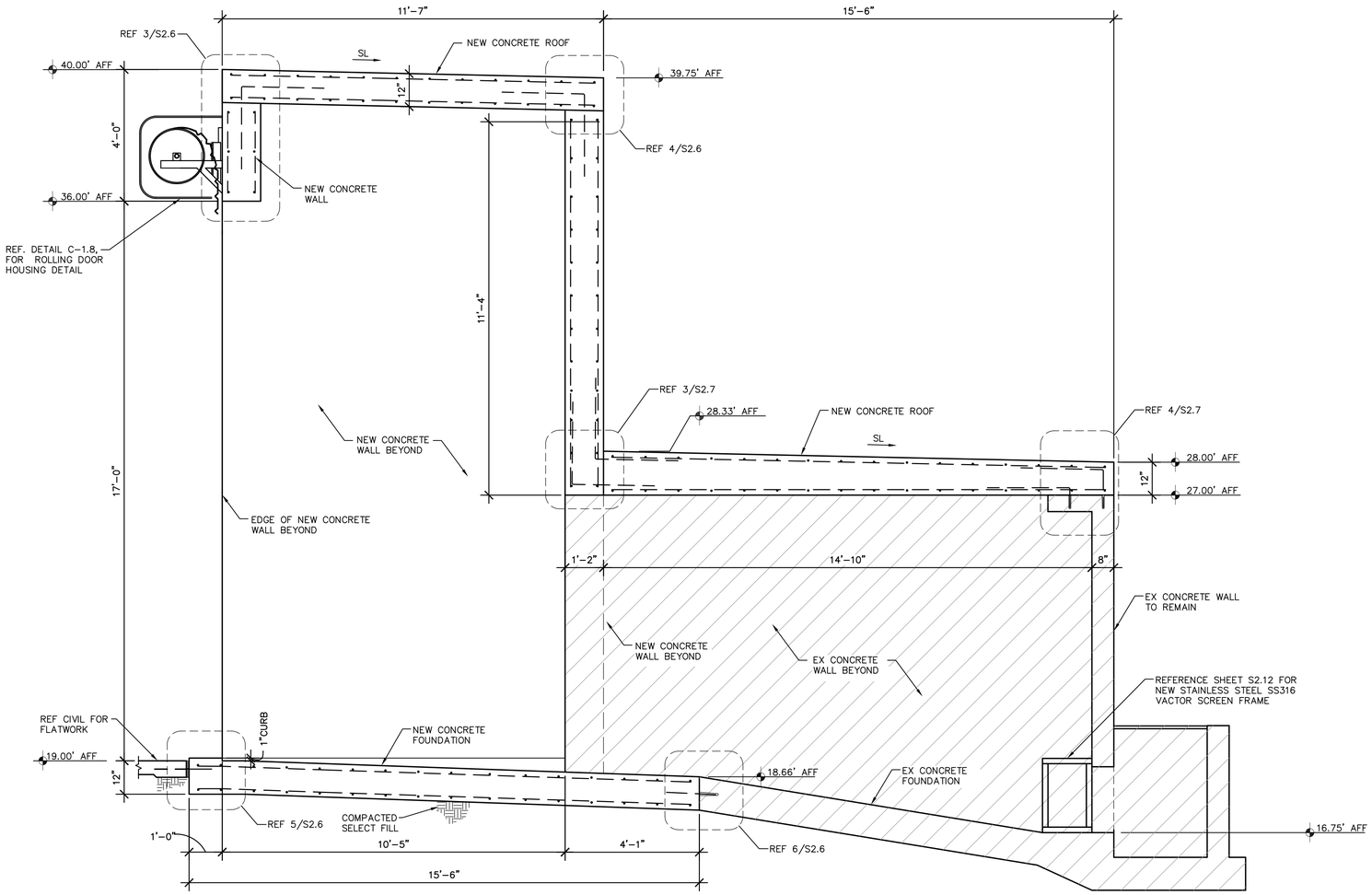

1 EXISTING VACTOR TRUCK DISPOSAL AREA CROSS SECTION

GREEN, RUBIANO & ASSOCIATES
CONSULTING STRUCTURAL ENGINEERS
1220 WEST HARRISON
HARLINGEN, TEXAS 78550
PH: (956)428-4461 FAX: (956)428-0287
FIRM REGISTRATION #F-4145

SEAL

STATE OF TEXAS
ROLANDO R. RUBIANO
86360
LICENSED
PROFESSIONAL ENGINEER
10-30-2020

PROJECT

ROBINDALE WWTP VACTOR DISPOSAL IMPROVEMENTS

BROWNSVILLE, TEXAS

CLIENT

BROWSVILLE PUBLIC UTILITIES BOARD

BROWNSVILLE, TEXAS

MARK	DATE	DESCRIPTION

PROJECT NO.	1053-08
DATE	10-30-20
DRAWN BY	JA
CHECKED BY	BD
SCALE	AS SHOWN

SHEET TITLE

STRUCTURAL CROSS SECTIONS

SHEET NO.

S2.4

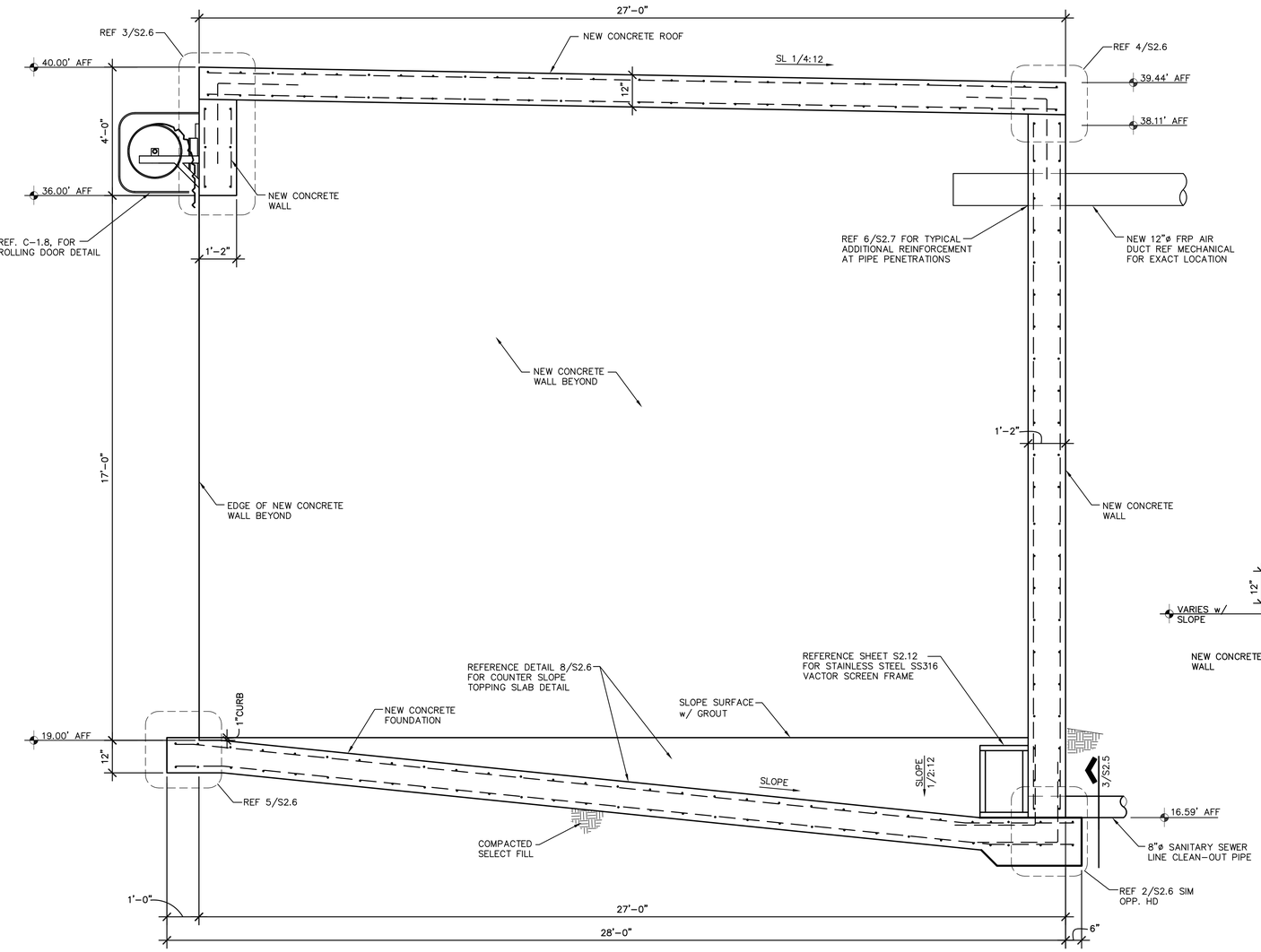

1 CROSS SECTION THRU NEW VACTOR TRUCK DISPOSAL AREA

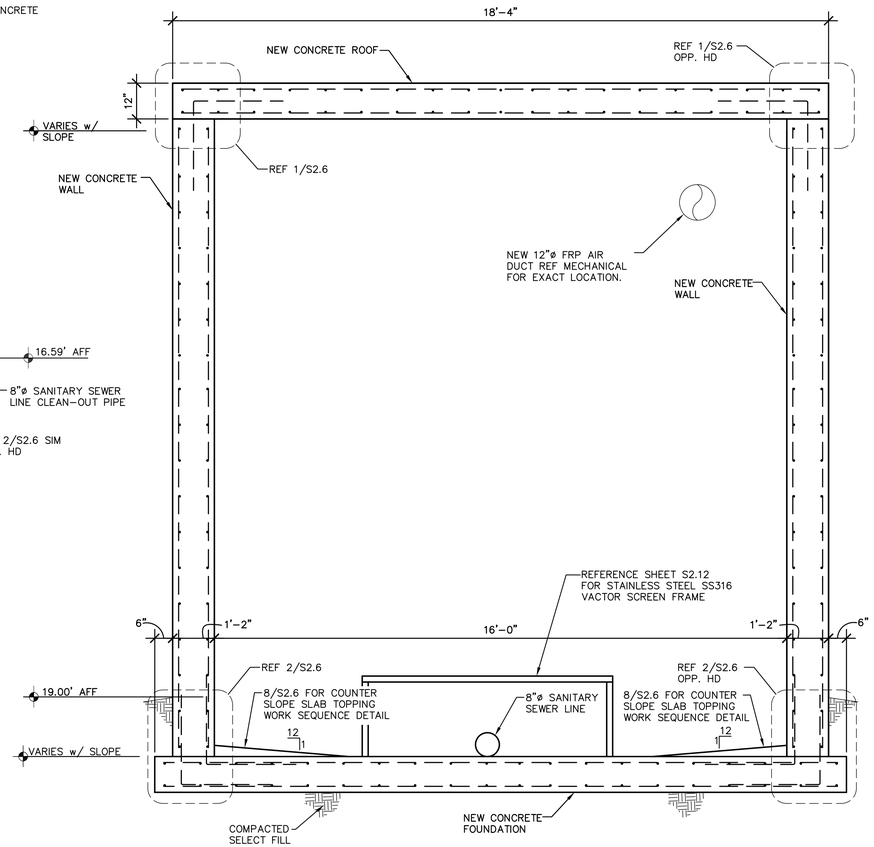

2 CROSS SECTION THRU NEW VACTOR TRUCK DISPOSAL AREA

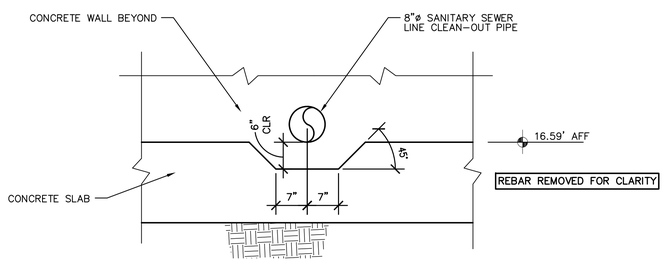

3 NOTE:

1. BEND REBAR AS REQUIRED AROUND CLEAN-OUT PIPE TO PROVIDE CONCRETE CLEARANCE.

GREEN, RUBIANO & ASSOCIATES
CONSULTING STRUCTURAL ENGINEERS
1220 WEST HARRISON
HARLINGEN, TEXAS 78550
PH: (956)428-4461 FAX: (956)428-0287
FIRM REGISTRATION #F-4145

SEAL

STATE OF TEXAS
ROLANDO R. RUBIANO
86369
LICENSED
PROFESSIONAL ENGINEER
10-30-2020

PROJECT

ROBINDALE WWTP VACTOR DISPOSAL IMPROVEMENTS

BROWNSVILLE, TEXAS

CLIENT

BROWSVILLE PUBLIC UTILITIES BOARD

BROWNSVILLE, TEXAS

MARK	DATE	DESCRIPTION

PROJECT NO.	1053-08
DATE	10-30-20
DRAWN BY	JA
CHECKED BY	BD
SCALE	AS SHOWN

SHEET TITLE

STRUCTURAL CROSS SECTIONS

SHEET NO.

S2.5

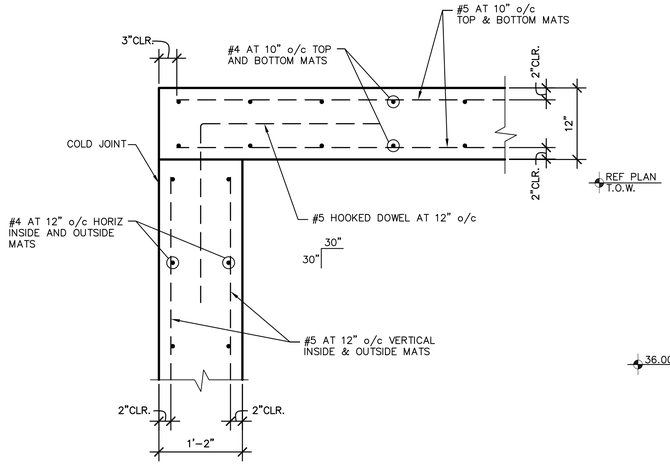

1

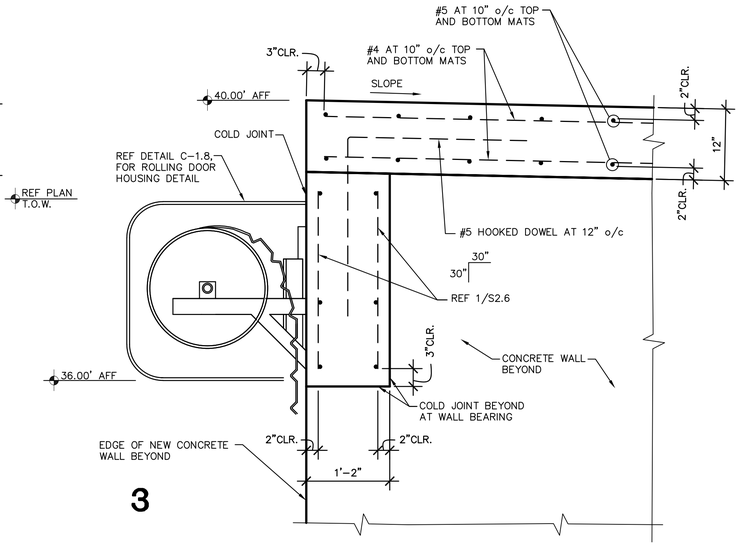

3

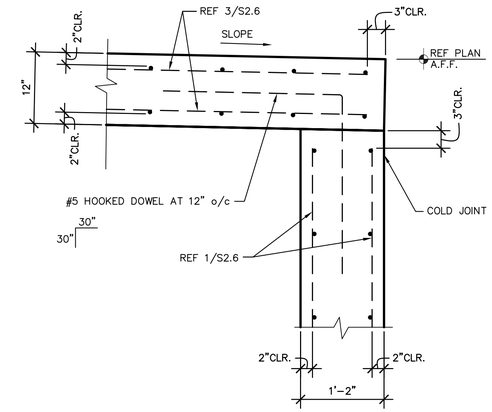

4

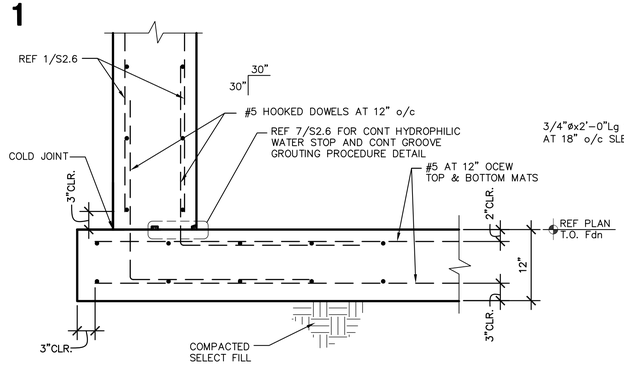

2

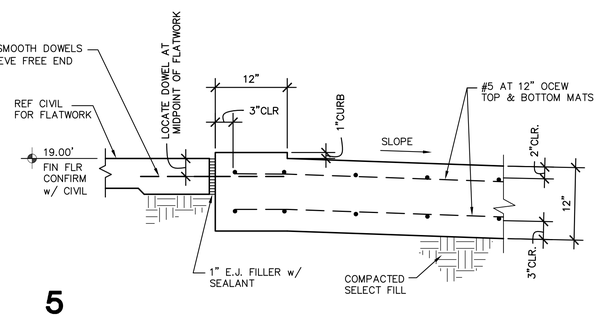

5

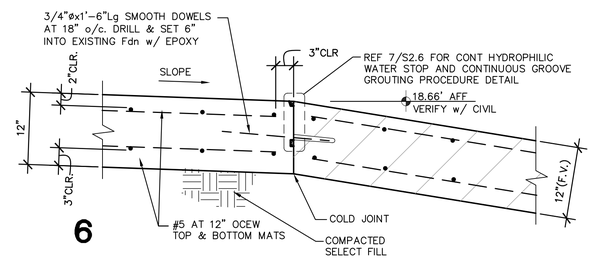

6

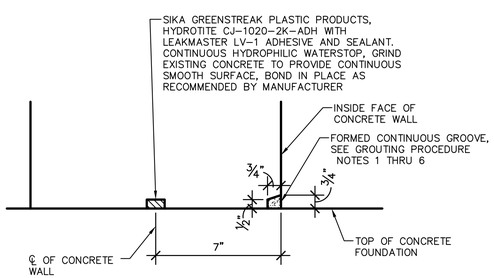

7 TYPICAL HYDROPHILIC WATER STOP AND CONTINUOUS GROOVE GROUTING PRECEDURE DETAIL

GROUTING PROCEDURE NOTES:

1. WAIT UNTIL NEW CONCRETE IS A MINIMUM OF 28 DAYS OLD PRIOR TO GROUTING GROOVE.
2. ROUGHEN AND CLEAN SURFACES OF GROOVE WITH POWER WIRE BRUSH OR SANDBLASTING.
3. SATURATE AREA FOR 24 HOURS PRIOR TO GROUTING.
4. DRY PACK WITH NON-SHRINK GROUT MEETING ASTM C1107.
5. USE STEEL HAMMER AND STEEL TOOL TO DENSELY PACK GROUT INTO GROOVE.
6. WATER CURE GROUT FOR 4 DAYS MINIMUM.

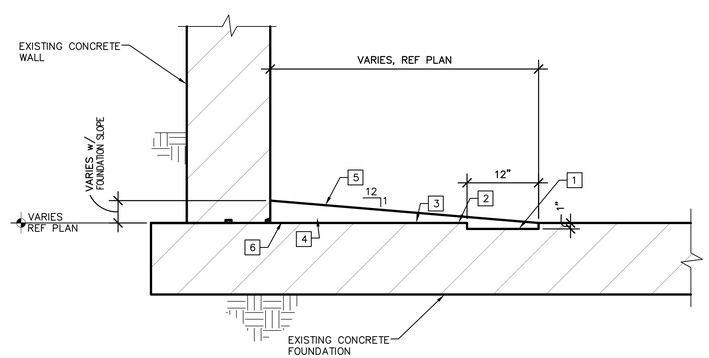

8

COUNTER SLOPE SLAB TOPPING WORK SEQUENCE DETAIL:

1. CUT AND CHIP A MINIMUM OF 1" OF EXISTING SLAB SURFACE.
2. SCARIFY AND TEXTURE EXPOSED CONCRETE SURFACE TO PRODUCE A CSP5-7 IN ACCORDANCE w/ ICRI GUIDELINE 310-2.
3. PREPARE ROUGHENED SURFACE OF EXPOSE CONCRETE AS DIRECTED BY EUCOCRETE PREPARATION RECOMMENDATION.
4. PLACE MINIMUM 1" THICK EUCOCRETE TOPPING SLAB TO PRODUCE A COUNTER SLOPE SURFACE.
5. WET CURE A MINIMUM OF 3 DAYS.
6. PROVIDE 6x6xW2.9xW2.9 WWF AT TOPPING SLAB 3" THICK OR THICKER.

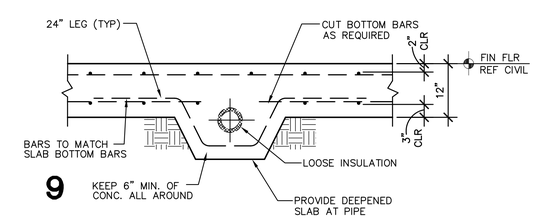

9

GREEN, RUBIANO & ASSOCIATES
CONSULTING STRUCTURAL ENGINEERS
1220 WEST HARRISON
HARLINGEN, TEXAS 78550
PH: (956)428-4461 FAX: (956)428-0287
FIRM REGISTRATION #F-4145

SEAL

STATE OF TEXAS
ROLANDO R. RUBIANO
86360
LICENSED
PROFESSIONAL ENGINEER
10-30-2020

PROJECT

ROBINDALE WWTP VACTOR DISPOSAL IMPROVEMENTS

BROWNSVILLE, TEXAS

CLIENT

BROWSVILLE PUBLIC UTILITIES BOARD

BROWNSVILLE, TEXAS

MARK	DATE	DESCRIPTION

PROJECT NO.	1053-08
DATE	10-30-20
DRAWN BY	JA
CHECKED BY	BD
SCALE	AS SHOWN

SHEET TITLE

STRUCTURAL DETAILS

SHEET NO.

S2.6

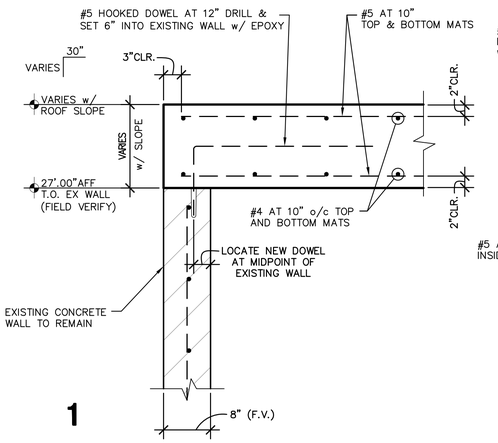

1

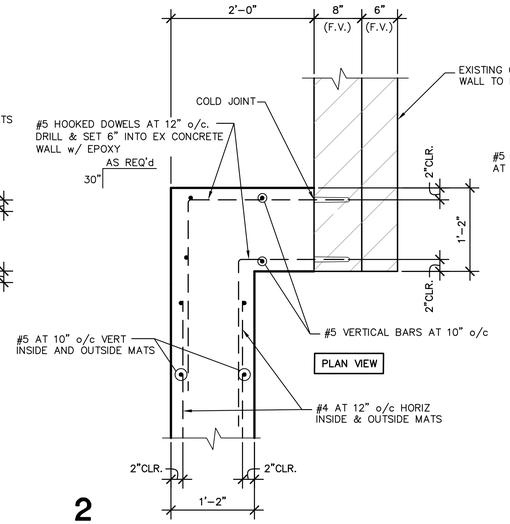

2

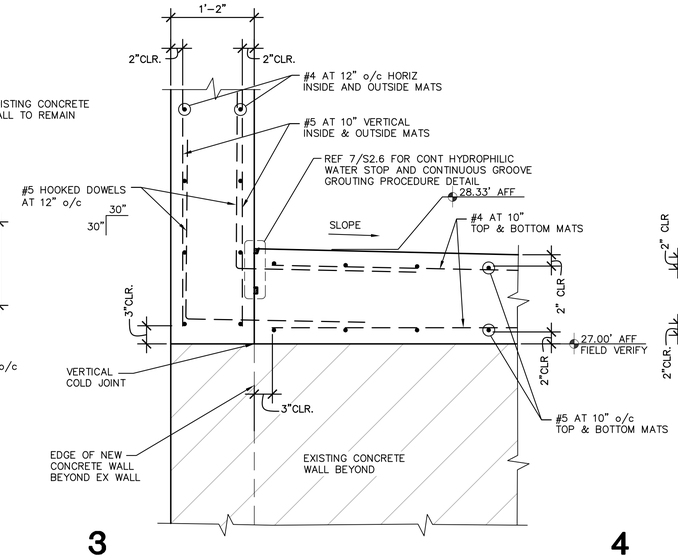

3

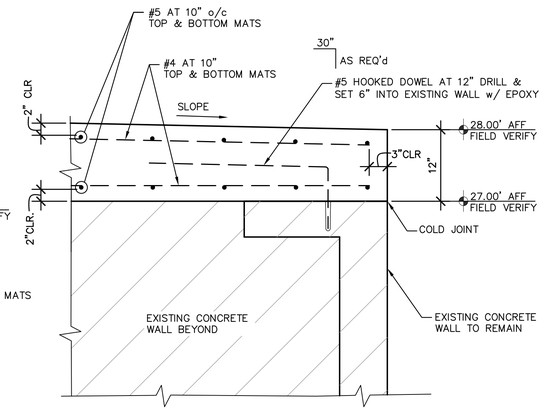

4

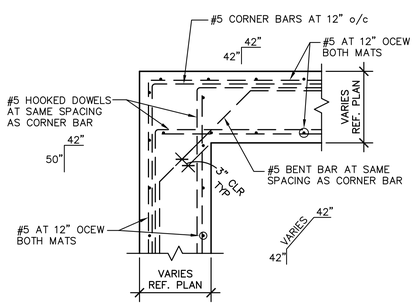

5 TYPICAL CORNER REINFORCING

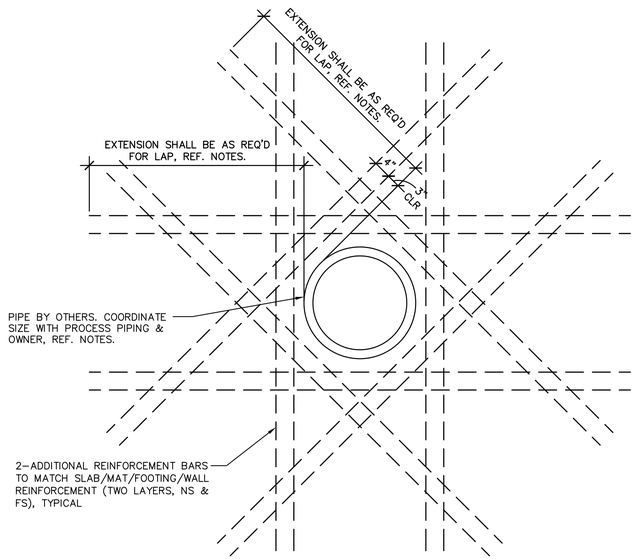

6 TYPICAL ADDITIONAL REINFORCEMENT AT PIPE PENETRATION THROUGH SLAB/MAT/FOOTING/WALL

NOTES:

1. REFER TO PROCESS PIPING DRAWINGS FOR PIPE SIZE AND LOCATION.
2. REFERENCE NOTE 15 OF CONCRETE NOTES ON GENERAL STRUCTURAL NOTES SHEET S1.1 FOR REINFORCEMENT LAP REQUIREMENTS.

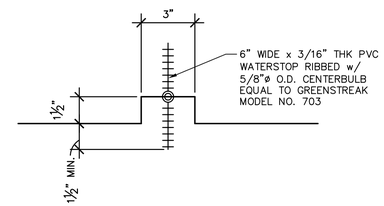

7

6" PVC CENTERBULB WATERSTOP NOTES:

1. PROVIDE MINIMUM 1.1/2" CLEARANCE BETWEEN WATERSTOP AND ALL REINFORCEMENT.
2. WATERSTOPS SHALL BE INSTALLED STRAIGHT & PLUMB.
3. ALL WATERSTOPS SHALL BE CONTINUOUS WITH HOT WELDED BUTT JOINTS BY USE OF A SPLICING IRON. CONTRACTOR SHALL PROVIDE FACTORY FABRICATED CORNER AND TEE-SHAPED PIECES AT INTERSECTIONS.
4. CONTRACTOR SHALL FOLLOW MANUFACTURER'S RECOMMENDED PROCEDURES FOR INSTALLATION OF WATERSTOPS.

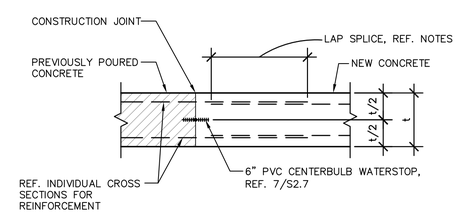

8 TYPICAL CONSTRUCTION JOINT FOR CAST-IN-PLACE CONCRETE

NOTES:

1. UNLESS NOTED OTHERWISE, THE MINIMUM LAP SPLICE LENGTH SHALL BE AS FOLLOWS:

BAR SIZE	LAP SPLICE LENGTH (INCHES)
#3	24"
#4	33"
#5	42"
#6	50"
#7	72"
#8	84"
#9	96"

2. CONSTRUCTION JOINTS SHALL BE COORDINATED WITH STRUCTURAL ENGINEER PRIOR TO FORMING CONCRETE POUR. CONTRACTOR SHALL SUBMIT PROPOSED CONSTRUCTION JOINT LOCATIONS FOR REVIEW DURING SUBMITTAL PHASE OF PROJECT, PRIOR TO CONSTRUCTION.

GREEN, RUBIANO & ASSOCIATES
CONSULTING STRUCTURAL ENGINEERS
1220 WEST HARRISON
HARLINGEN, TEXAS 78550
PH: (956)428-4461 FAX: (956)428-0287
FIRM REGISTRATION #F-4145

SEAL

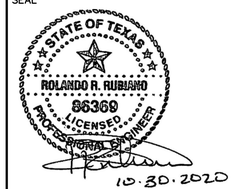

PROJECT

ROBINDALE WWTP VACTOR DISPOSAL IMPROVEMENTS

BROWNSVILLE, TEXAS

CLIENT

BROWSVILLE PUBLIC UTILITIES BOARD

BROWNSVILLE, TEXAS

MARK	DATE	DESCRIPTION

PROJECT NO.	1053-08
DATE	10-30-20
DRAWN BY	JA
CHECKED BY	BD
SCALE	AS SHOWN

SHEET TITLE

STRUCTURAL DETAILS

SHEET NO.

S2.7

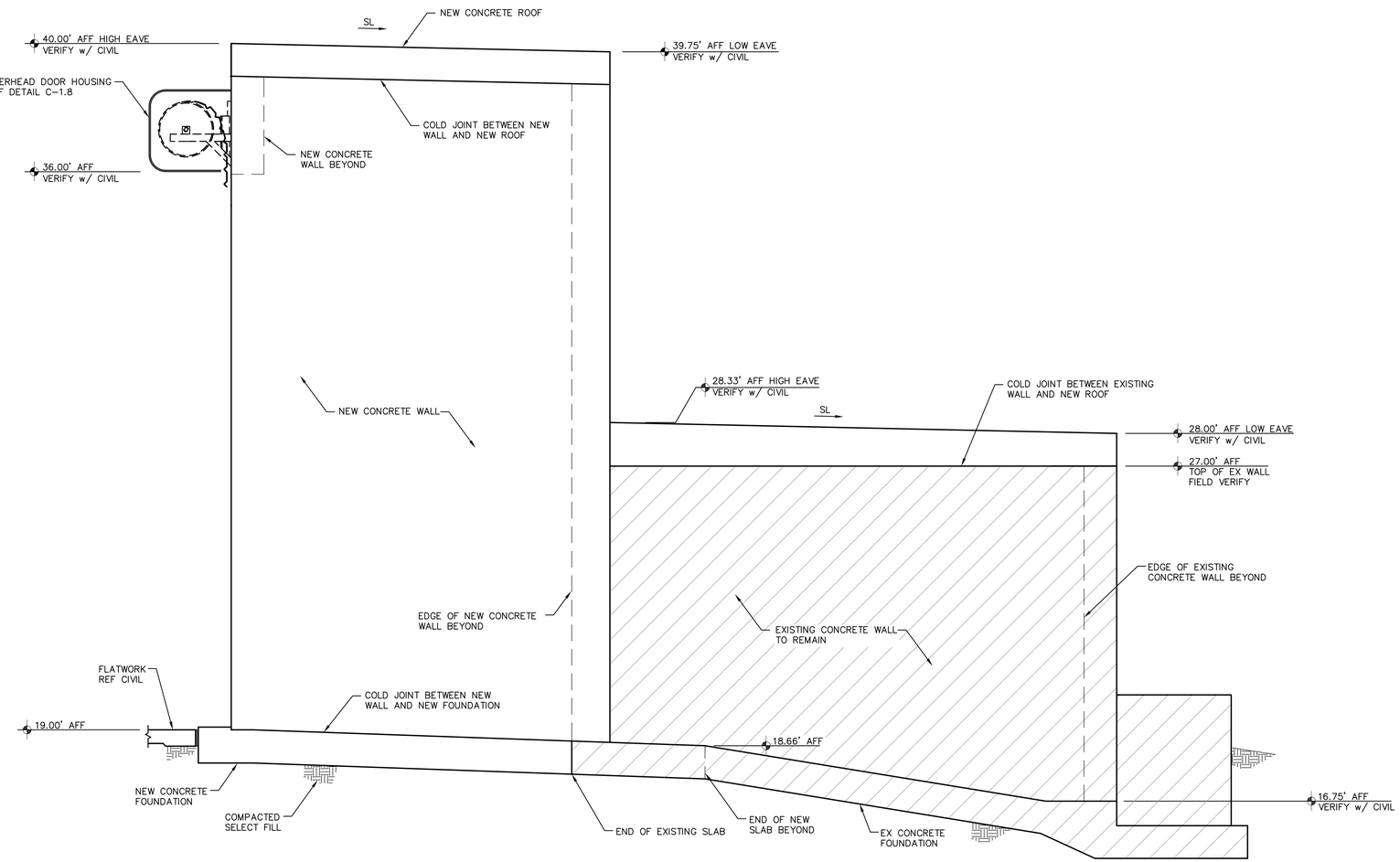

1 EXISTING VACTOR TRUCK DISPOSAL AREA EAST AND WEST ELEVATION

GREEN, RUBIANO & ASSOCIATES
CONSULTING STRUCTURAL ENGINEERS
1220 WEST HARRISON
HARLINGEN, TEXAS 78550
PH: (956)428-4461 FAX: (956)428-0287
FIRM REGISTRATION #F-4145

SEAL

STATE OF TEXAS
ROLANDO R. RUBIANO
86360
LICENSED
PROFESSIONAL ENGINEER

10-30-2020

PROJECT

ROBINDALE WWTP VACTOR DISPOSAL IMPROVEMENTS

BROWNSVILLE, TEXAS

CLIENT

BROWSVILLE PUBLIC UTILITIES BOARD

BROWNSVILLE, TEXAS

MARK	DATE	DESCRIPTION

PROJECT NO.	1053-08
DATE	10-30-20
DRAWN BY	JA
CHECKED BY	BD
SCALE	AS SHOWN

SHEET TITLE

STRUCTURAL ELEVATIONS

SHEET NO.

S2.8

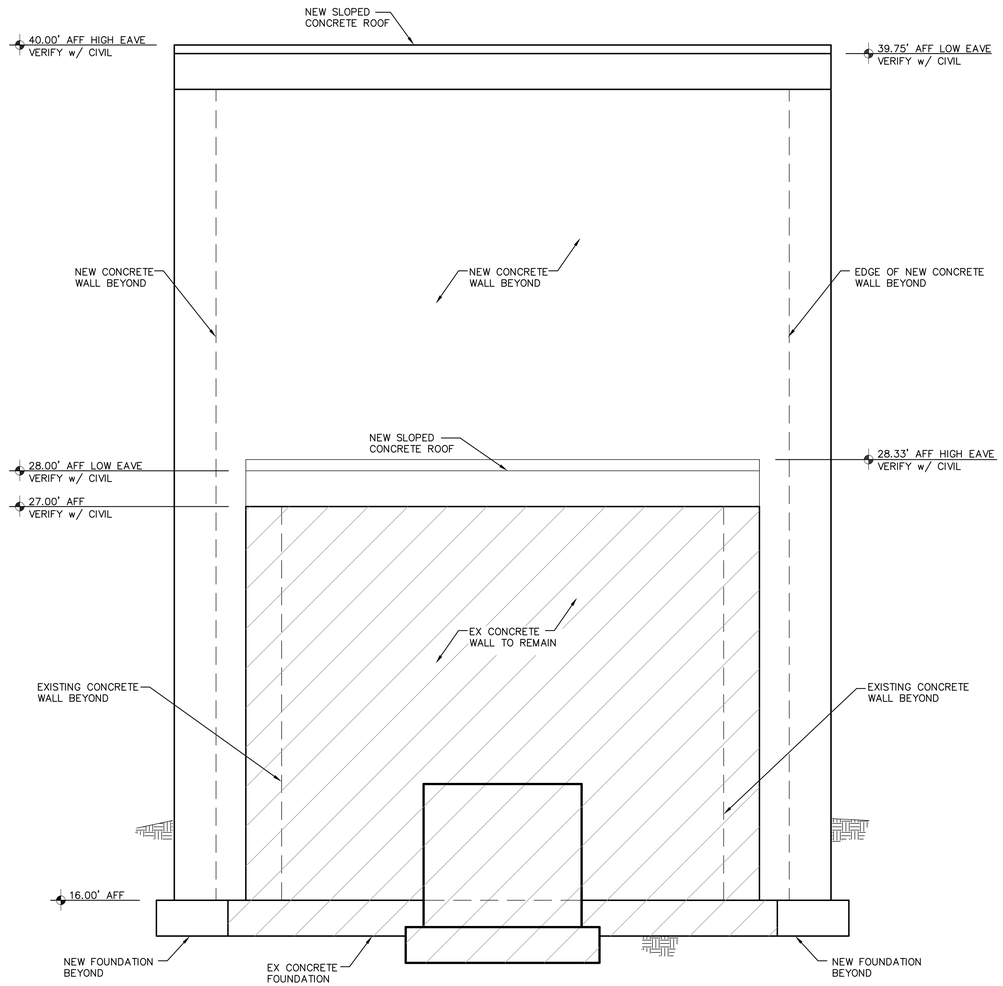

1 **EXISTING VACTOR TRUCK DISPOSAL AREA NORTH ELEVATION**

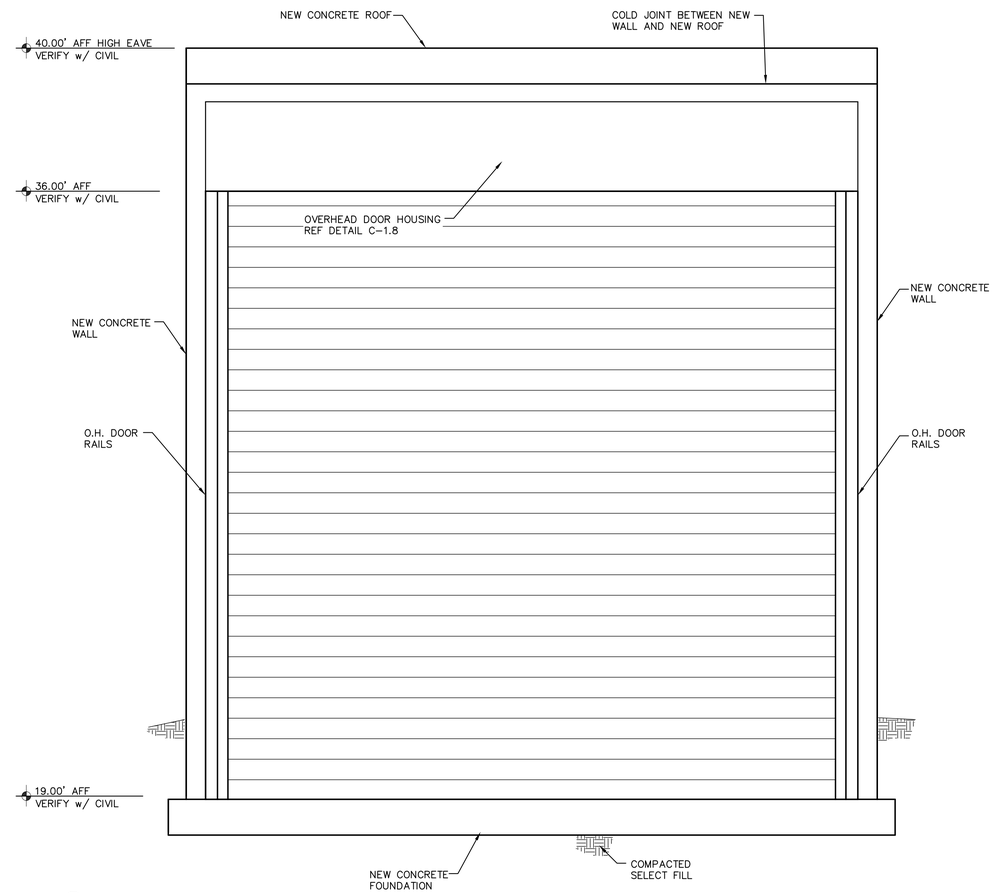

2 **EXISTING VACTOR TRUCK DISPOSAL AREA SOUTH ELEVATION**

GREEN, RUBIANO & ASSOCIATES
CONSULTING STRUCTURAL ENGINEERS
1220 WEST HARRISON
HARLINGEN, TEXAS 78550
PH: (956)428-4461 FAX: (956)428-0287
FIRM REGISTRATION #F-4145

SEAL

STATE OF TEXAS
ROLANDO R. RUBIANO
86360
LICENSED
PROFESSIONAL ENGINEER

10-30-2020

PROJECT

ROBINDALE WWTP VACTOR DISPOSAL IMPROVEMENTS

BROWNSVILLE, TEXAS

CLIENT

BROWSVILLE PUBLIC UTILITIES BOARD

BROWNSVILLE, TEXAS

MARK	DATE	DESCRIPTION

PROJECT NO.	1053-08
DATE	10-30-20
DRAWN BY	JA
CHECKED BY	BD
SCALE	AS SHOWN

SHEET TITLE

STRUCTURAL ELEVATIONS

SHEET NO.

S2.9

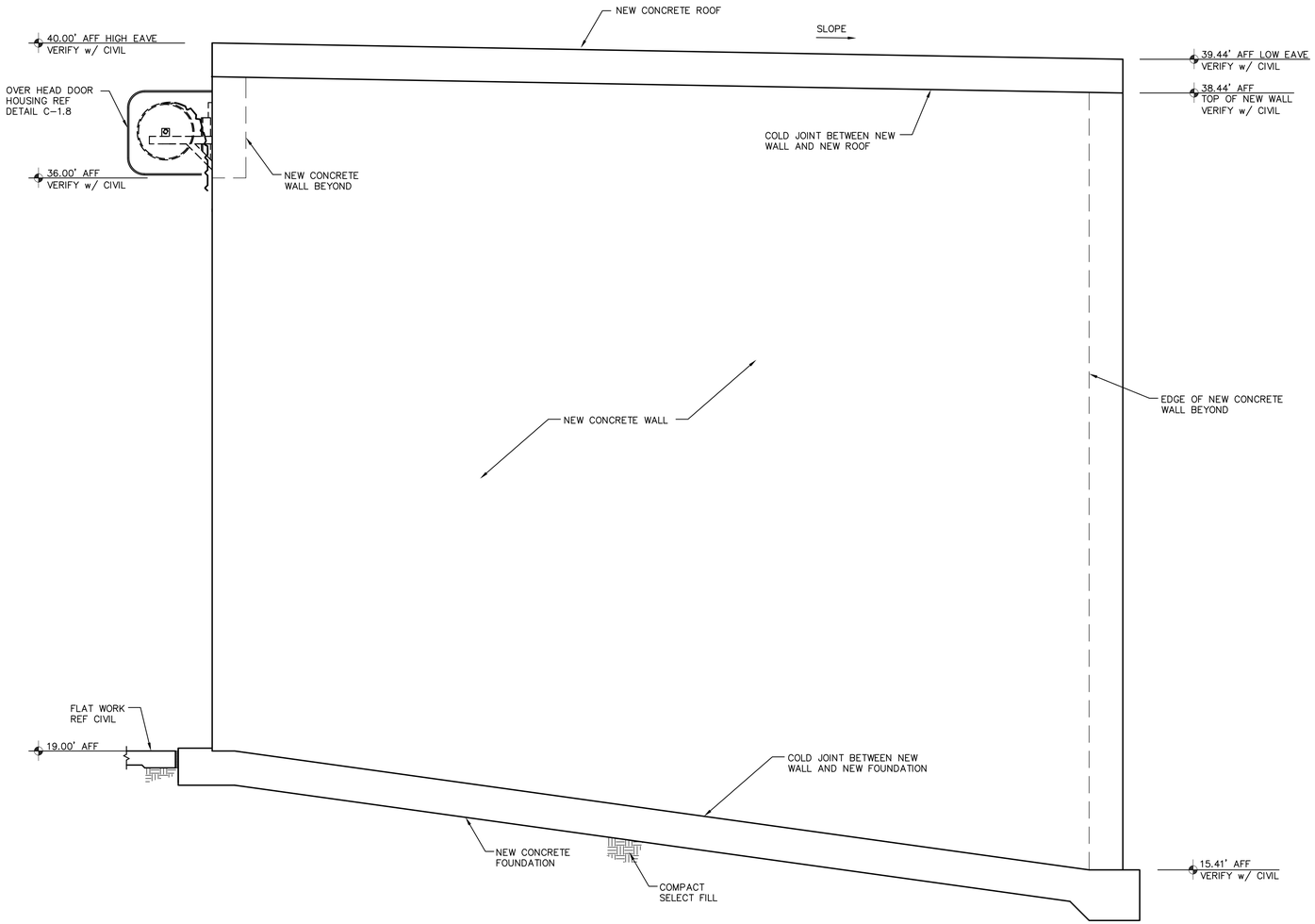

1 **NEW VACTOR TRUCK DISPOSAL AREA EAST ELEVATION**

GREEN, RUBIANO & ASSOCIATES
CONSULTING STRUCTURAL ENGINEERS
1220 WEST HARRISON
HARLINGEN, TEXAS 78550
PH: (956)428-4461 FAX: (956)428-0287
FIRM REGISTRATION #F-4145

SEAL

STATE OF TEXAS
ROLANDO R. RUBIANO
86360
LICENSED
PROFESSIONAL ENGINEER

10-30-2020

PROJECT

ROBINDALE WWTP VACTOR DISPOSAL IMPROVEMENTS

BROWNSVILLE, TEXAS

CLIENT

BROWSVILLE PUBLIC UTILITIES BOARD

BROWNSVILLE, TEXAS

MARK	DATE	DESCRIPTION

PROJECT NO.	1053-08
DATE	10-30-20
DRAWN BY	JA
CHECKED BY	BD
SCALE	AS SHOWN

SHEET TITLE

STRUCTURAL ELEVATIONS

SHEET NO.

S2.10

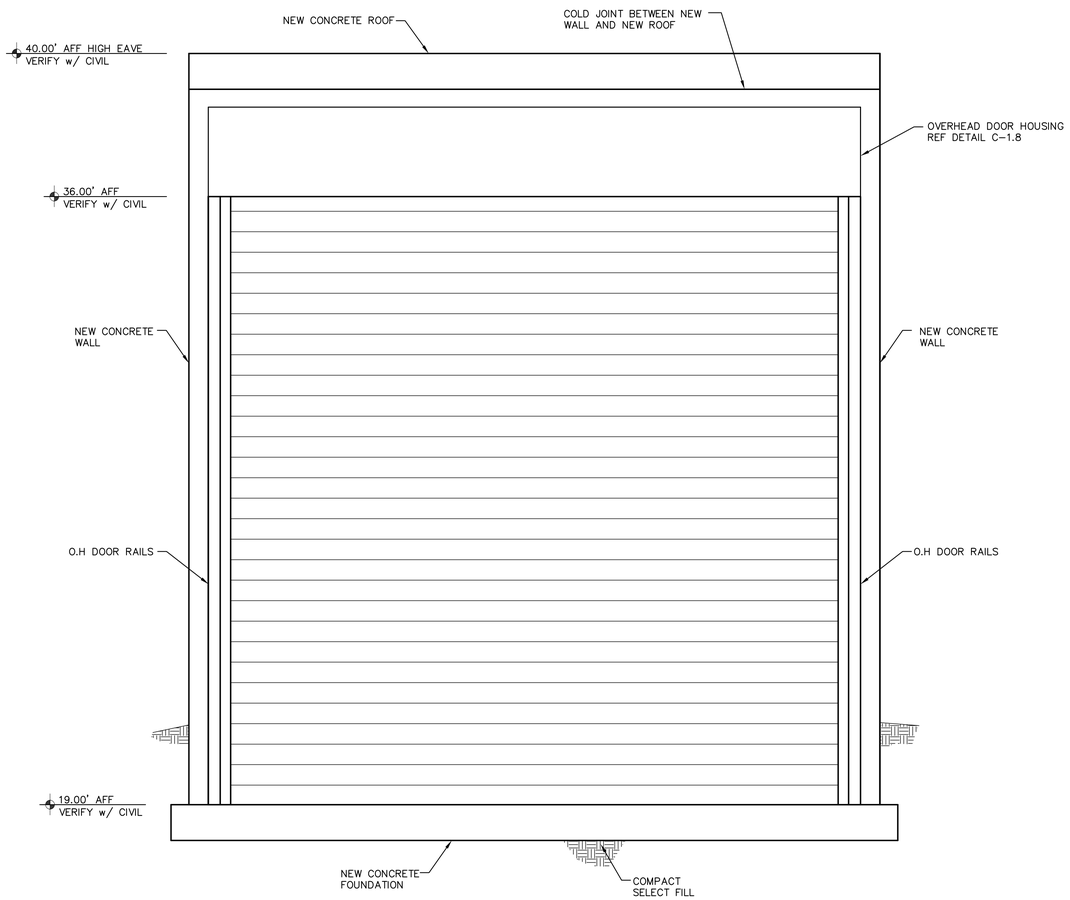

1 NEW VACTOR TRUCK DISPOSAL AREA SOUTH ELEVATION

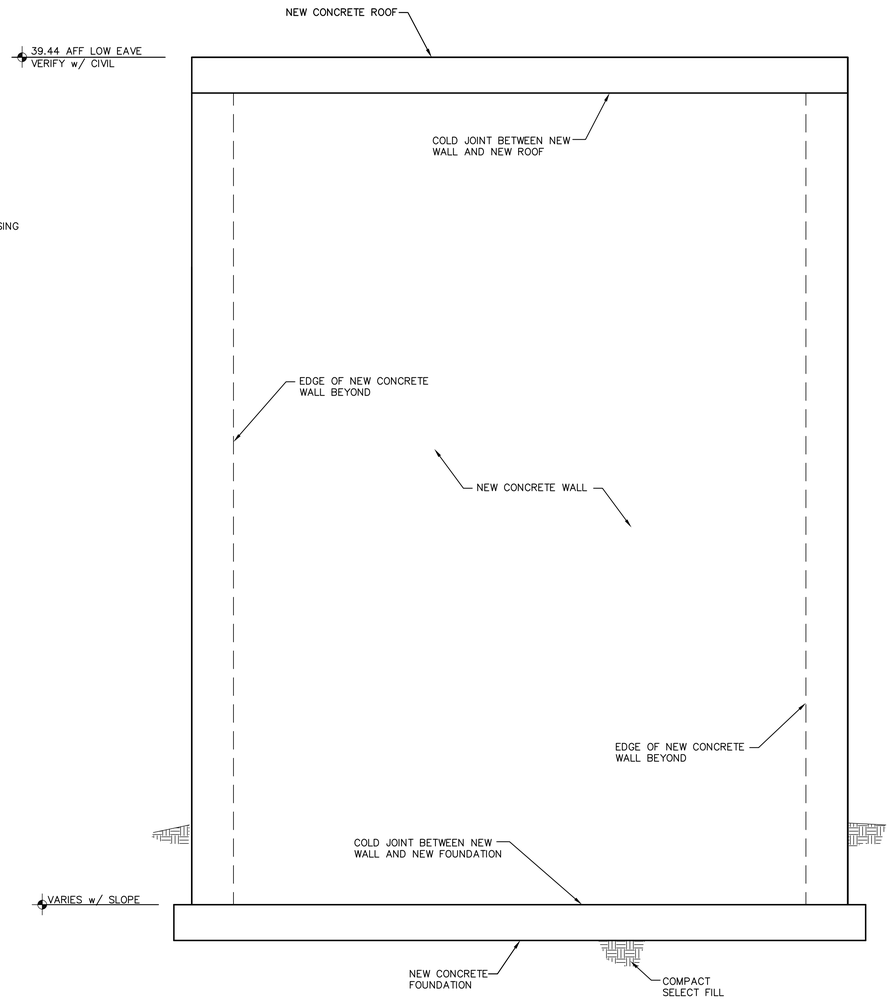

2 NEW VACTOR TRUCK DISPOSAL AREA NORTH ELEVATION

GREEN, RUBIANO & ASSOCIATES
CONSULTING STRUCTURAL ENGINEERS
1220 WEST HARRISON
HARLINGEN, TEXAS 78550
PH: (956)428-4461 FAX: (956)428-0287
FIRM REGISTRATION #F-4145

SEAL

STATE OF TEXAS
ROLANDO R. RUBIANO
86360
LICENSED
PROFESSIONAL ENGINEER

10-30-2020

PROJECT

ROBINDALE WWTP VACTOR DISPOSAL IMPROVEMENTS

BROWNSVILLE, TEXAS

CLIENT

BROWSVILLE PUBLIC UTILITIES BOARD

BROWNSVILLE, TEXAS

MARK	DATE	DESCRIPTION

PROJECT NO.	1053-08
DATE	10-30-20
DRAWN BY	JA
CHECKED BY	BD
SCALE	AS SHOWN

SHEET TITLE

STRUCTURAL ELEVATIONS

SHEET NO.

S2.11

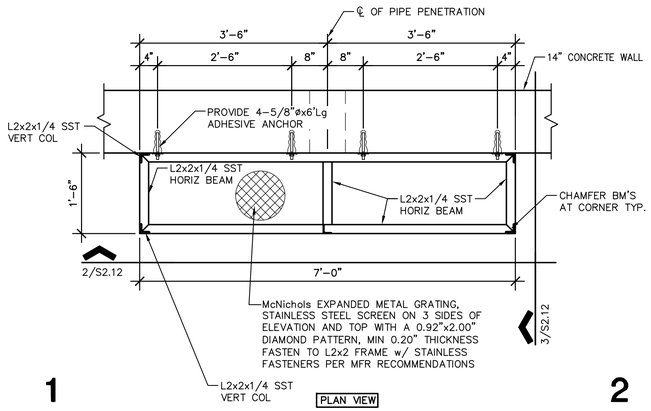

1

PLAN VIEW

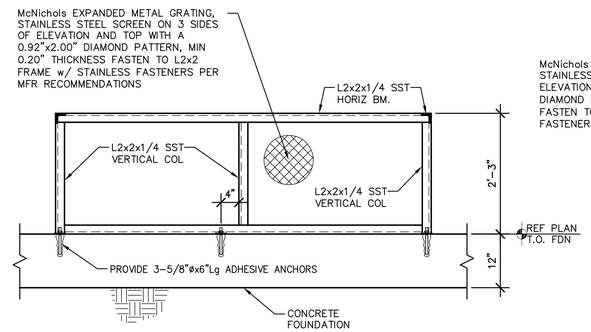

2

FRONT ELEVATION

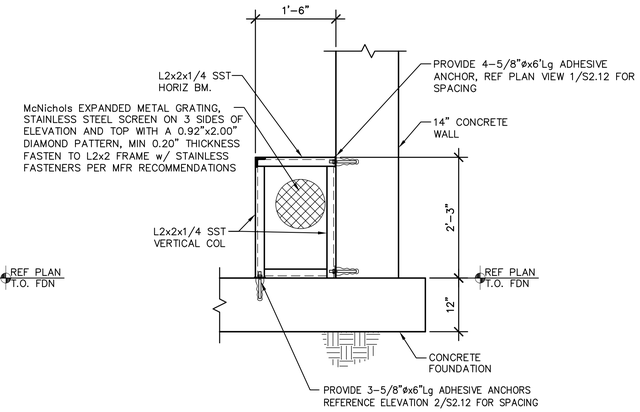

3

SIDE ELEVATION

NOTE:

1. SST DENOTES STANLESS STEEL UNLESS NOTED OTHERWISE.

GREEN, RUBIANO & ASSOCIATES
CONSULTING STRUCTURAL ENGINEERS
1220 WEST HARRISON
HARLINGEN, TEXAS 78550
PH: (956)428-4461 FAX: (956)428-0287
FIRM REGISTRATION #F-4145

SEAL

STATE OF TEXAS
ROLANDO R. RUBIANO
86360
LICENSED
PROFESSIONAL ENGINEER
10-30-2020

PROJECT

ROBINDALE WWTP VACTOR DISPOSAL IMPROVEMENTS

BROWNSVILLE, TEXAS

CLIENT

BROWSVILLE PUBLIC UTILITIES BOARD

BROWNSVILLE, TEXAS

MARK	DATE	DESCRIPTION

PROJECT NO.	1053-08
DATE	10-30-20
DRAWN BY	JA
CHECKED BY	BD
SCALE	AS SHOWN

SHEET TITLE

VACTOR SCREEN PLAN AND DETAILS

SHEET NO.

S2.12